KYOCERA

FS-1028MFP

SERVICE MANUAL

Published in May 2012
2H9SM064
Rev.4

CAUTION

RISK OF EXPLOSION IF BATTERY IS REPLACED BY AN INCORRECT TYPE. DISPOSE OF USED BATTERIES ACCORDING TO THE INSTRUCTIONS.

It may be illegal to dispose of this battery into the municipal waste stream. Check with your local solid waste officials for details in your area for proper disposal.

ATTENTION

IL Y A UN RISQUE D'EXPLOSION SI LA BATTERIE EST REMPLACEE PAR UN MODELE DE TYPE INCORRECT. METTRE AU REBUT LES BATTERIES UTILISEES SELON LES INSTRUCTIONS DONNEES.

Il peut être illégal de jeter les batteries dans des eaux d'égout municipales. Vérifiez avec les fonctionnaires municipaux de votre région pour les détails concernant des déchets solides et une mise au rebut appropriée.

Revision history

Revision	Date	Replaced pages	Remarks
1	June 24, 2009	1-1-1, 1-1-3, 1-1-4, 1-2-2, 1-3-1 to 1-3-64, 1-4-3, 1-4-5, 1-4-6, 1-4-7, 1-4-9, 1-5-3, 1-5-12, 1-5-21, 1-5-29, 1-5-30, 1-5-22, 1-5-23, 1-5-24, 1-5-25, 1-5-26, 1-5-27, 1-5-29, 1-5-30, 1-5-49, 2-1-8, 2-2-2, 2-2-4, 2-3-2, 2-4-2, 2-4-4	-
2	August 11, 2009	1-3-3 to 1-3-10, 1-3-16, 1-3-17, 1-3-31 to 1-3-34, 1-3-36, 1-3-42, 1-3-51, 1-5-2, 1-5-29, 1-5-30	-
3	December 24, 2009	CONTENTS, 1-1-1, 1-1-2, 1-3-6 to 1-3-9	-
4	April 24, 2012	Safety precautions, 1-3-47, 1-3-48, Address	-

This page is intentionally left blank.

Safety precautions

This booklet provides safety warnings and precautions for our service personnel to ensure the safety of their customers, their machines as well as themselves during maintenance activities. Service personnel are advised to read this booklet carefully to familiarize themselves with the warnings and precautions described here before engaging in maintenance activities.

Safety warnings and precautions

Various symbols are used to protect our service personnel and customers from physical danger and to prevent damage to their property. These symbols are described below:

⚠ **DANGER:** High risk of serious bodily injury or death may result from insufficient attention to or incorrect compliance with warning messages using this symbol.

⚠ **WARNING:** Serious bodily injury or death may result from insufficient attention to or incorrect compliance with warning messages using this symbol.

⚠ **CAUTION:** Bodily injury or damage to property may result from insufficient attention to or incorrect compliance with warning messages using this symbol.

Symbols

The triangle (△) symbol indicates a warning including danger and caution. The specific point of attention is shown inside the symbol.

General warning. Warning of risk of electric shock.

Warning of high temperature.

⃠ indicates a prohibited action. The specific prohibition is shown inside the symbol.

General prohibited action. Disassembly prohibited.

● indicates that action is required. The specific action required is shown inside the symbol.

General action required. Remove the power plug from the wall outlet.

Always ground the copier.

1. Installation Precautions

WARNING

- Do not use a power supply with a voltage other than that specified. Avoid multiple connections to one outlet: they may cause fire or electric shock. When using an extension cable, always check that it is adequate for the rated current. .....
- Connect the ground wire to a suitable grounding point. Not grounding the copier may cause fire or electric shock. Connecting the earth wire to an object not approved for the purpose may cause explosion or electric shock. Never connect the ground cable to any of the following: gas pipes, lightning rods, ground cables for telephone lines and water pipes or faucets not approved by the proper authorities. .....

CAUTION:

- Do not place the copier on an infirm or angled surface: the copier may tip over, causing injury. .....
- Do not install the copier in a humid or dusty place. This may cause fire or electric shock. .....
- Do not install the copier near a radiator, heater, other heat source or near flammable material. This may cause fire. .....
- Allow sufficient space around the copier to allow the ventilation grills to keep the machine as cool as possible. Insufficient ventilation may cause heat buildup and poor copying performance. .....
- Always handle the machine by the correct locations when moving it. .....
- Always use anti-toppling and locking devices on copiers so equipped. Failure to do this may cause the copier to move unexpectedly or topple, leading to injury. .....
- Avoid inhaling toner or developer excessively. Protect the eyes. If toner or developer is accidentally ingested, drink a lot of water to dilute it in the stomach and obtain medical attention immediately. If it gets into the eyes, rinse immediately with copious amounts of water and obtain medical attention. .....
- Advice customers that they must always follow the safety warnings and precautions in the copier's instruction handbook. .....

2. Precautions for Maintenance

WARNING

- Always remove the power plug from the wall outlet before starting machine disassembly. .....
- Always follow the procedures for maintenance described in the service manual and other related brochures. .....
- Under no circumstances attempt to bypass or disable safety features including safety mechanisms and protective circuits. .....
- Always use parts having the correct specifications. .....
- Always use the thermostat or thermal fuse specified in the service manual or other related brochure when replacing them. Using a piece of wire, for example, could lead to fire or other serious accident. .....
- When the service manual or other serious brochure specifies a distance or gap for installation of a part, always use the correct scale and measure carefully. .....
- Always check that the copier is correctly connected to an outlet with a ground connection. .....
- Check that the power cable covering is free of damage. Check that the power plug is dust-free. If it is dirty, clean it to remove the risk of fire or electric shock. .....
- Never attempt to disassemble the optical unit in machines using lasers. Leaking laser light may damage eyesight. .....
- Handle the charger sections with care. They are charged to high potentials and may cause electric shock if handled improperly. .....

CAUTION

- Wear safe clothing. If wearing loose clothing or accessories such as ties, make sure they are safely secured so they will not be caught in rotating sections. .....
- Use utmost caution when working on a powered machine. Keep away from chains and belts. .....
- Handle the fixing section with care to avoid burns as it can be extremely hot. .....
- Check that the fixing unit thermistor, heat and press rollers are clean. Dirt on them can cause abnormally high temperatures. .....

- Do not remove the ozone filter, if any, from the copier except for routine replacement. .....
- Do not pull on the AC power cord or connector wires on high-voltage components when removing them; always hold the plug itself. .....
- Do not route the power cable where it may be stood on or trapped. If necessary, protect it with a cable cover or other appropriate item. .....
- Treat the ends of the wire carefully when installing a new charger wire to avoid electric leaks. .....
- Remove toner completely from electronic components. .....
- Run wire harnesses carefully so that wires will not be trapped or damaged. .....
- After maintenance, always check that all the parts, screws, connectors and wires that were removed, have been refitted correctly. Special attention should be paid to any forgotten connector, trapped wire and missing screws. .....
- Check that all the caution labels that should be present on the machine according to the instruction handbook are clean and not peeling. Replace with new ones if necessary. .....
- Handle greases and solvents with care by following the instructions below: .....
  · Use only a small amount of solvent at a time, being careful not to spill. Wipe spills off completely.
  · Ventilate the room well while using grease or solvents.
  · Allow applied solvents to evaporate completely before refitting the covers or turning the power switch on.
  · Always wash hands afterwards.
- Never dispose of toner or toner bottles in fire. Toner may cause sparks when exposed directly to fire in a furnace, etc. .....
- Should smoke be seen coming from the copier, remove the power plug from the wall outlet immediately. .....

3. Miscellaneous

WARNING

- Never attempt to heat the drum or expose it to any organic solvents such as alcohol, other than the specified refiner; it may generate toxic gas. .....
- Keep the machine away from flammable liquids, gases, and aerosols. A fire or an electric shock might occur. .....

This page is intentionally left blank.

CONTENTS

1-1 Specifications

1-1-1 Specifications 1-1-1
1-1-2 Parts names 1-1-3
(1) Overall 1-1-3
(2) Operation panel 1-1-4
1-1-3 Machine cross section 1-1-5

1-2 Installation

1-2-1 Installation environment 1-2-1
1-2-2 Unpacking 1-2-2
(1) Unpacking 1-2-2
(2) Removing the tapes 1-2-3
1-2-3 Installing the expansion memory (option) 1-2-5

1-3 Maintenance Mode

1-3-1 Maintenance mode 1-3-1
(1) Executing a maintenance item 1-3-1
(2) Maintenance modes item list 1-3-2
(3) Contents of the maintenance mode items 1-3-4
1-3-2 Management mode 1-3-55
(1) Using the management mode 1-3-55
(2) Common Settings 1-3-56
(3) Copy Settings 1-3-60
(4) Sending Settings 1-3-60
(5) Document Box Settings 1-3-60
(6) Printer Settings 1-3-61
(7) Printing Reports/Sending Notice 1-3-61
(8) Adjustment/Maintenance 1-3-62
(9) Date/Timer 1-3-62
(10) Editing Destination (Address Book/Adding One-Touch Keys) 1-3-63
(11) Restarting the System 1-3-64
(12) Network Setup 1-3-64
(13) User Login Administration 1-3-66
(14) Job accounting 1-3-66

1-4 Troubleshooting

1-4-1 Paper misfeed detection 1-4-1
(1) Paper misfeed indication 1-4-1
(2) Paper misfeed detection condition 1-4-1
1-4-2 Self-diagnostic function 1-4-2
(1) Self-diagnostic function 1-4-2
(2) Self diagnostic codes 1-4-3
1-4-3 Image formation problems 1-4-10
(1) Completely blank printout. 1-4-11
(2) All-black printout. 1-4-11
(3) Dropouts. 1-4-12
(4) Black dots. 1-4-12
(5) Black horizontal streaks. 1-4-12
(6) Black vertical streaks. 1-4-13
(7) Unsharpness. 1-4-13
(8) Gray background. 1-4-13
(9) Dirt on the top edge or back of the paper. 1-4-14
(10) Undulated printing at the right edge (scanning start position). 1-4-14
1-4-4 Electric problems 1-4-15
1-4-5 Mechanical problems 1-4-18

1-5 Assembly and Disassembly

1-5-1 Precautions for assembly and disassembly 1-5-1
(1) Precautions 1-5-1
(2) Drum 1-5-1
(3) Toner 1-5-1
(4) How to tell a genuine Kyocera Mita toner container 1-5-2
1-5-2 Outer covers 1-5-3
(1) Detaching and refitting the left cover and right cover 1-5-3
1-5-3 Paper feed section 1-5-6
(1) Detaching and refitting the paper feed assembly (paper feed roller and pickup roller) 1-5-6
(2) Detaching and refitting the retard roller assembly 1-5-8
(3) Detaching and refitting the MP paper feed roller 1-5-10
(4) Note on removing and Installing the upper registration roller and lower registration roller 1-5-12
1-5-4 Optical section 1-5-13
(1) Detaching and refitting the original cover 1-5-13
(2) Detaching and refitting the scanner unit (LSU) 1-5-14
(3) Detaching and refitting the laser scanner unit (LSU) 1-5-17
(4) Replacing the image scanner unit (ISU) 1-5-21
(5) Detaching and refitting the exposure lamp and inverter PWB 1-5-27
1-5-5 Developing section 1-5-29
(1) Detaching and refitting the developing unit 1-5-29
1-5-6 Drum section 1-5-30
(1) Detaching and refitting the drum unit 1-5-30
(2) Detaching and refitting the main charger unit 1-5-31
1-5-7 Transfer/separation section 1-5-32
(1) Detaching and refitting the transfer roller 1-5-32
1-5-8 Fuser section 1-5-34
(1) Detaching and refitting the fuser unit 1-5-34
(2) Switching the fuser pressure 1-5-38
1-5-9 PWBs 1-5-39
(1) Detaching and refitting the control PWB 1-5-39
(2) Detaching and refitting the power source PWB 1-5-42
(3) Detaching and refitting the high voltage PWB 1-5-45
(4) Detaching and refitting the scanner PWB 1-5-49
1-5-10 Others 1-5-50
(1) Detaching and refitting the main motor 1-5-50
(2) Direction of installing the left cooling fan motor, right cooling fan motor and power source fan motor 1-5-51

1-6 Requirements on PWB Replacement

1-6-1 Firmware 1-6-1
(1) Upgrading the firmware 1-6-1
1-6-2 Remarks on control PWB replacement 1-6-2

2-1 Mechanical Construction

2-1-1 Paper feed/conveying section 2-1-1
(1) Cassette paper feed section 2-1-1
(2) MP tray paper feed section 2-1-2
(3) Paper conveying section 2-1-3
2-1-2 Drum section 2-1-4
(1) Drum section 2-1-4
(2) Main charger unit 2-1-5
2-1-3 Optical section 2-1-6
(1) Scanner unit 2-1-6
(2) Image scanner unit (ISU) 2-1-7
(3) Laser scanner unit (LSU) 2-1-9
2-1-4 Developing section 2-1-11
2-1-5 Transfer/separation section 2-1-12
2-1-6 Cleaning section 2-1-13
2-1-7 Fuser section 2-1-14
2-1-8 Paper exit section 2-1-16
2-1-9 Duplex/conveying section 2-1-18

2-2 Electrical Parts Layout

2-2-1 Electrical parts layout 2-2-1
(1) PWBs 2-2-1
(2) Switches and sensors 2-2-3
(3) Other electrical components 2-2-4

2-3 Operation of the PWBs

2-3-1 Power source PWB 2-3-1
2-3-2 Control PWB 2-3-3
2-3-3 Scanner PWB 2-3-9

2-4 Appendixes

2-4-1 Appendixes 2-4-1
(1) Wiring diagram 2-4-1
(2) Repetitive defects gauge 2-4-3
(3) Maintenance parts list 2-4-4

This page is intentionally left blank.

1-1-1 Specifications

Type	Desktop
Printing method	Electrophotography by semiconductor laser, single drum system
Originals	Sheet, Book, 3-dimensional objects (maximum original size: Folio/Legal)
Original feed system	Contact glass: fixed Document processor (optional): sheet-through
Paper weight	Cassette: 60 to 120 g/m² (Duplex: 60 to 120 g/m²) MP tray: 60 to 220 g/m², 230 µm (Cardstock)
Paper type	Cassette: Plain, Rough, Recycled, Preprinted, Bond, Color (Colour), Prepunched, Letterhead, High Quality, Custom 1 to 8 (Duplex: Same as simplex) MP tray: Plain, Transparency, Rough, Vellum, Labels, Recycled, Preprinted, Bond, Cardstock, Color (Colour), Prepunched, Letterhead, Thick, Envelope, High Quality, Custom 1 to 8
Paper size	Cassette: Maximum: 8 1/2 × 14"/A4 (Duplex: 8 1/2 × 14"/A4) Minimum: 5 1/2 × 8 1/2"/A6 (Duplex: 7 1/4 × 10 1/2"/A5) MP tray: Maximum: 8 1/2 × 14"/A4 Minimum: 3 5/8 × 6 1/2"/C5
Magnification ratios	Manual mode: 25 - 400%, 1% increments
Printing speed (Simplex)	A4: 28 ppm Letter: 30 ppm Legal: 24 ppm B5R: 22 ppm A5R: 17 ppm A6R: 17 ppm
Warm-up time	(22 °C/71.6 °F, 60%RH) Power on: 20 seconds Recovery from the low power mode: 10 seconds or less Recovery from the sleep mode: 15 seconds or less
Paper capacity	Cassette: 250 sheets (80 g/m²) MP tray: 50 sheet (80 g/m², plain paper, Letter/A4 or smaller)
Paper capacity	Cassette: 250 sheets (80 g/m²) MP tray: 50 sheet (80 g/m², plain paper, Letter/A4 or smaller)
Output tray capacity	150 sheets (80 g/m²)
Continuous printing	1 to 999 sheets
Photoconductor	OPC drum (diameter 30 mm)
Image write system	Semiconductor laser (1 beam)
Charging system	Scorotron (positive charging)
Developing system	Mono component dry developing method Toner replenishing: Automatic from the toner container
Transfer system	Transfer roller (negative-charged)
Separation system	Small diameter separation, discharger brush
Cleaning system	Drum: Counter blade
Charge erasing system	Exposure by eraser lamp (LED)
Fusing system	Heat roller system
Memory	Standard: 256 MB Maximum: 768 MB
Resolution	600 × 600 dpi
Operating environment	Temperature: 10 to 32.5 °C/50 to 90.5 °F Humidity: 15 to 80% Altitude: 2,500 m/8,202 ft maximum Brightness: 1,500 lux maximum
Dimensions (W × H × D)	494 × 410 × 366 mm 19 7/16 ×16 1/8 ×14 3/8"
Weight	Approx. 15 kg/33 lbs
Floor requirements (W × D)	640 × 646 mm 25 3/16 × 25 7/16"

Power source	120 V AC, 60 Hz, more than 7.8 A 220 - 240 V AC, 50/60 Hz, more than 4.0 A
Power consumption	During printing: 479.9 W (U.S.A./Canada), 470 W (European countries) During standby: 83.8 W (U.S.A./Canada), 83.4 W (European countries) Low power mode: 82.6 W (U.S.A./Canada), 82.3 W (European countries) During sleep mode: 8.0 W (U.S.A./Canada), 8.8 W (European countries) Power off: 0 W
Options	Paper feeder, document processor (DP) and additional memory

Printing functions

Printing speed	Same as copying speed.
First print time	6 seconds or less (A4, feed from cassette)
Resolution	Fine 1200, Fast 1200, 600 dpi, 300 dpi
Compatible operation system	Windows 2000, Windows XP, Windows XP Professional, Windows Server 2003, Windows Server 2003 x64 Edition, Windows Vista x86 Edition, Windows Vista x64 Edition, Windows 2008 Server, Windows Server 2008 x64 Edition, Apple Macintosh OS 10.x
Interface	Standard: USB: 1 port (Hi-speed USB 2.0) USB host: 1 port Ethernet: 1 port (10BASE-T/100BASE-TX)
Page description language	PRESCRIBE

Scanning functions

Compatible operation system	Windows 2000 (Service Pack 4), Windows XP, Windows Vista, Windows Server 2003, Windows Server 2008
System requirements	IBM PC/AT compatible CPU: Celeron 600 MHz or higher RAM: 128 MB or more HDD free space: 20 MB or more Interface: Ethernet
Resolution	600 dpi, 400 dpi, 300 dpi, 200 dpi
File format	JPEG, TIFF, PDF, XPS
Scanning speed *1	1-sided: B/W 20 images/min Color 7 images/min 2-sided: B/W 11 images/min Color 4 images/min (A4 landscape, 600 dpi, Image quality: Text/Photo original)
Interface	Ethernet (10 BASE-T/100 BASE-TX) USB2.0 (Hi-Speed USB)
Network protocol	TCP/IP
Transmission system	PC transmission SMB Scan to SMB FTP Scan to FTP, FTP over SSL E-mail transmission SNMP Scan to E-mail TWAIN scan*2 WIA scan*3

*1 When using the dual scan document processor (except TWAIN and WIA scanning)
*2 Available Operating System: Windows 2000 (Service Pack 4), Windows XP, Windows Vista
*3 Available Operating System: Windows Vista

NOTE: These specifications are subject to change without notice.

1-1-2 Parts names

(1) Overall

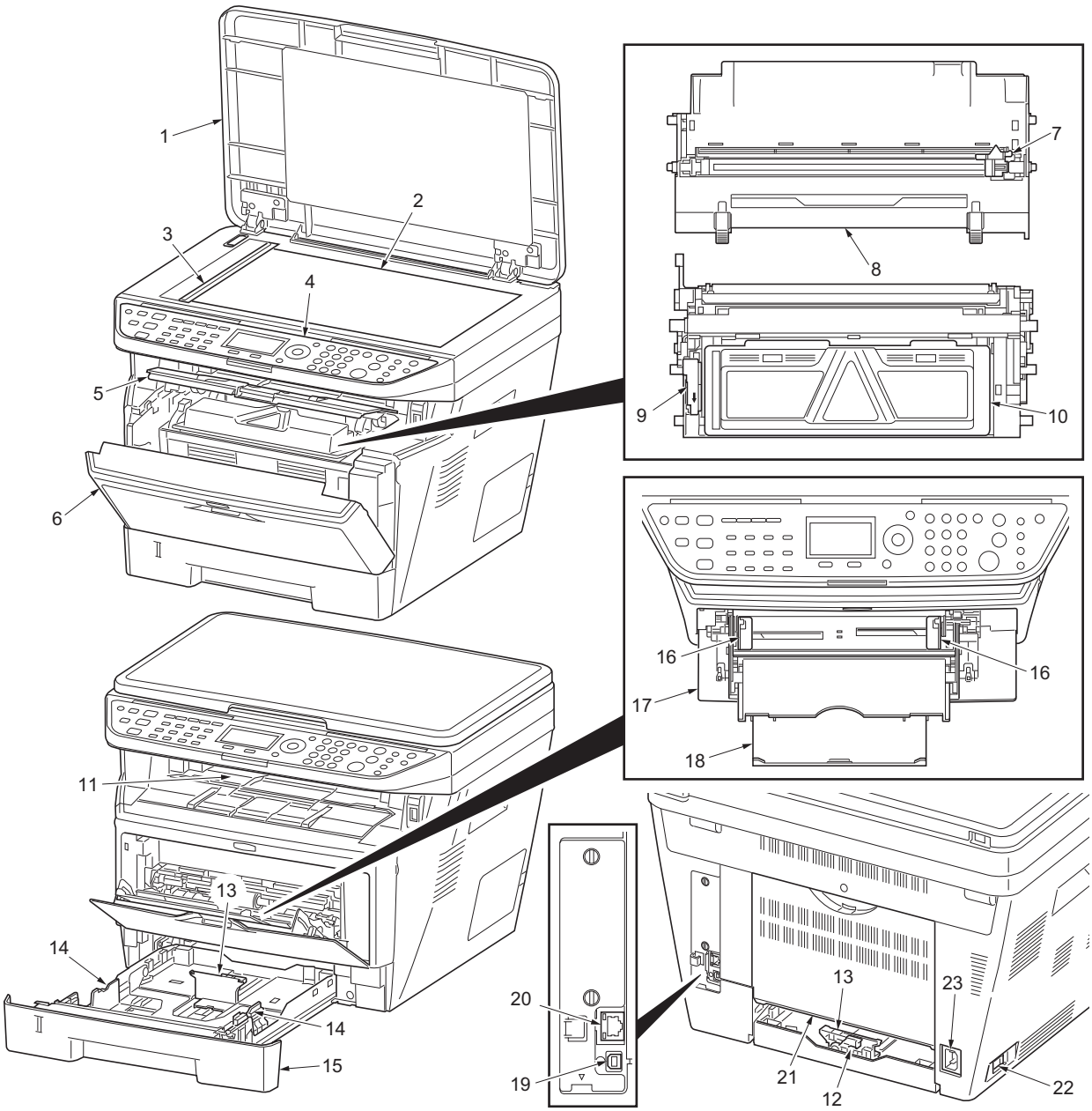

Figure 1-1-1

1. Original cover
2. Platen (contact glass)
3. Original size Indicator plate
4. Operation panel
5. Top cover
6. Front cover
7. Main charger cleaner
8. Drum unit
9. Lock lever
10. Toner container
11. Top tray
12. Paper length guide
13. Paper stopper
14. Paper width guides
15. Cassette
16. Paper width guides (MP tray)
17. MP (Multi-Purpose) tray
18. MP tray extension
19. USB Interface connector
20. Network Interface connector
21. Rear cover
22. Main power switch
23. Power cord connector

(2) Operation panel

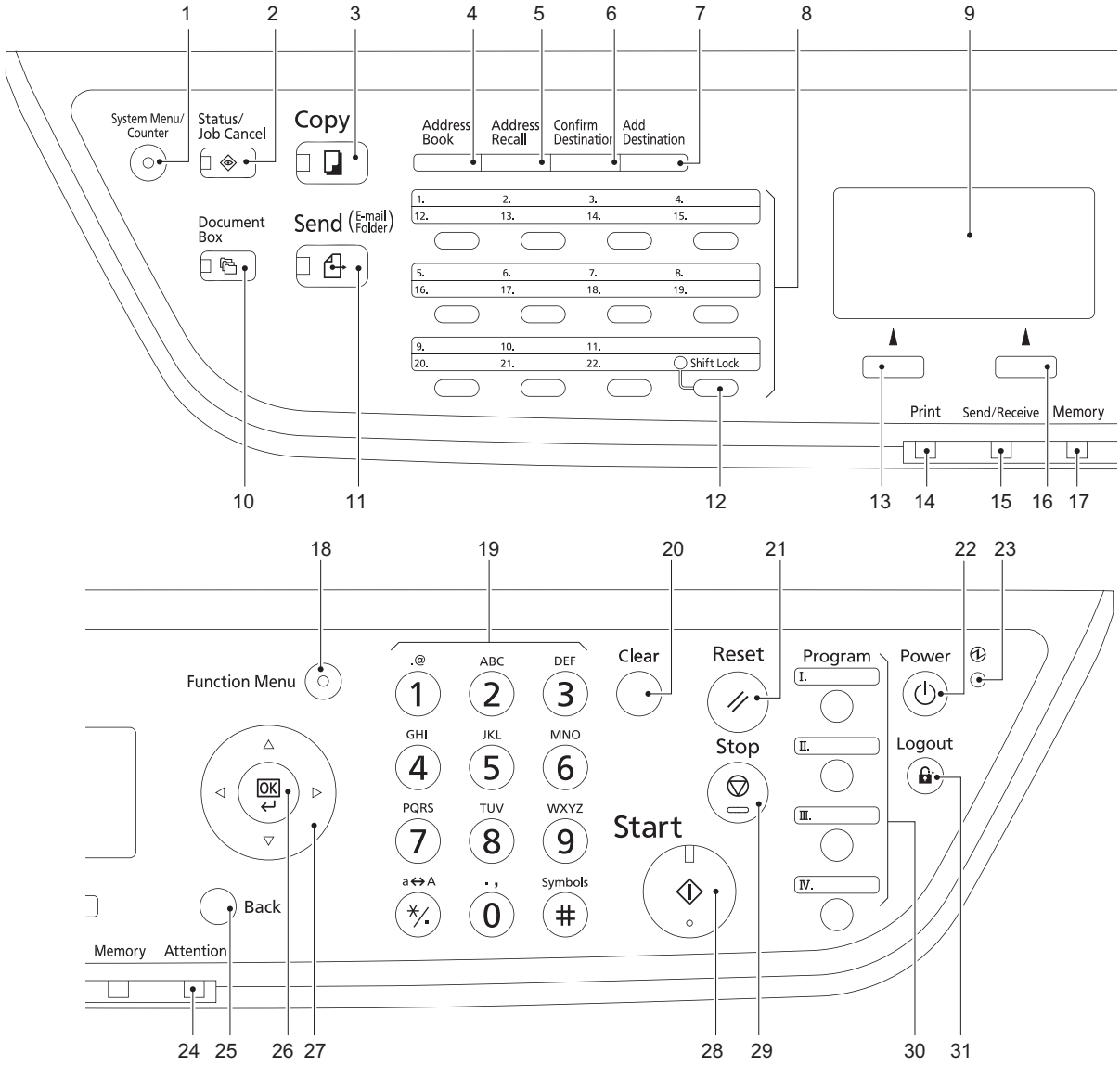

Figure 1-1-2

1. System menu/Counter key (LED)
2. Status/Job Cancel key (LED)
3. Copy key (LED)
4. Address Book key
5. Address Recall key
6. Confirm Destination key
7. Add Destination key
8. One-touch keys
9. Message display
10. Document Box key (LED)
11. Send key (LED)
12. Shift Lock key (LED)
13. Left Select key
14. Print indicator
15. Send/Receive indicator
16. Right Select key
17. Memory indicator
18. Function Menu key (LED)
19. Numeric keys
20. Clear key
21. Reset key
22. Power key
23. Main power indicator
24. Attention indicator
25. Back key
26. OK key
27. Cursor keys
28. Start key (LED)
29. Stop key
30. Program keys
31. Logout key (LED)

1-1-3 Machine cross section

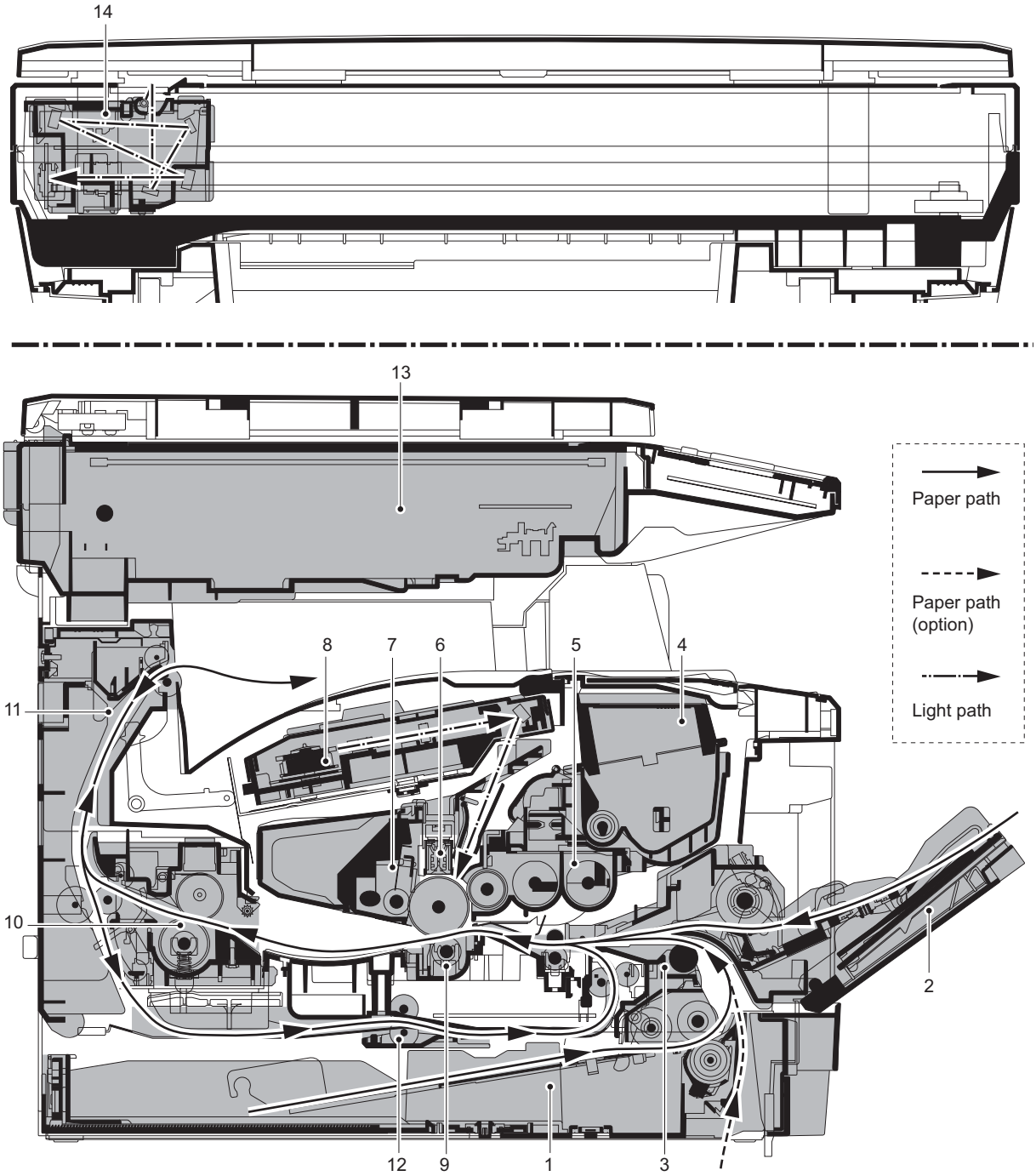

Figure 1-1-3

1. Cassette
2. MP tray
3. Paper feed/conveying section
4. Toner container
5. Developing unit
6. Main charger unit
7. Drum unit
8. Laser scanner unit (LSU)
9. Transfer/separation section
10. Fuser section
11. Exit section
12. Duplex/conveying section
13. Scanner section
14. Image scanner unit (ISU)

This page is intentionally left blank.

1-2-1 Installation environment

1. Temperature: 10 to 32.5°C/50 to 90.5°F
2. Humidity: 15 to 80%RH
3. Power supply: 120 V AC, 7.8 A
   220 - 240 V AC, 4.0 A
4. Power source frequency: 50 Hz ±0.3%/60 Hz ±0.3%
5. Installation location
   Avoid direct sunlight or bright lighting. Ensure that the photoconductor will not be exposed to direct sunlight or other strong light when removing paper jams.
   Avoid locations subject to high temperature and high humidity or low temperature and low humidity; an abrupt change in the environmental temperature; and cool or hot, direct air.
   Avoid places subject to dust and vibrations.
   Choose a surface capable of supporting the weight of the machine.
   Place the machine on a level surface (maximum allowance inclination: 1°).
   Avoid air-borne substances that may adversely affect the machine or degrade the photoconductor, such as mercury, acidic of alkaline vapors, inorganic gasses, NOx, SOx gases and chlorine-based organic solvents.
   Select a well-ventilated location.
6. Allow sufficient access for proper operation and maintenance of the machine.

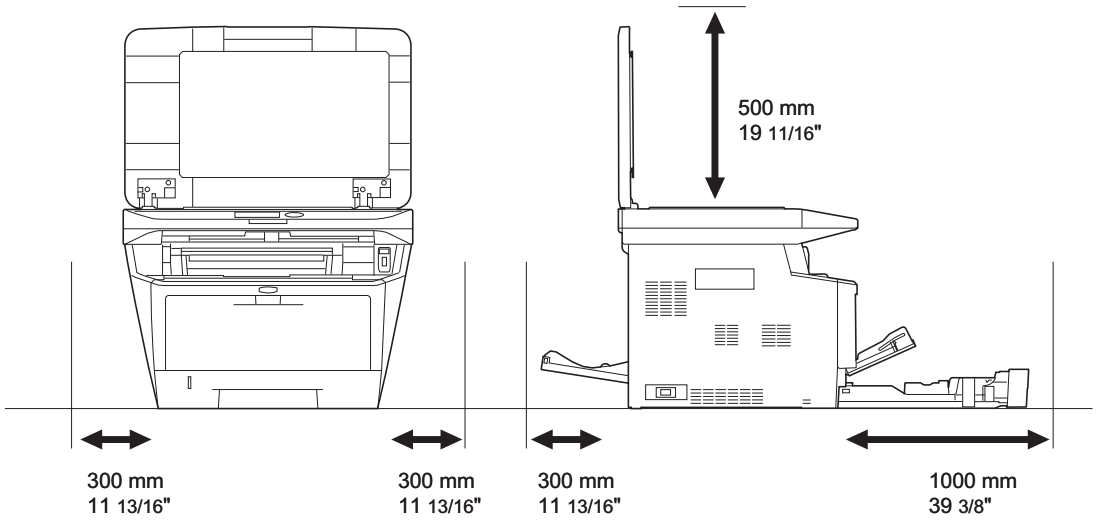

Figure 1-2-1

1-2-2 Unpacking

(1) Unpacking

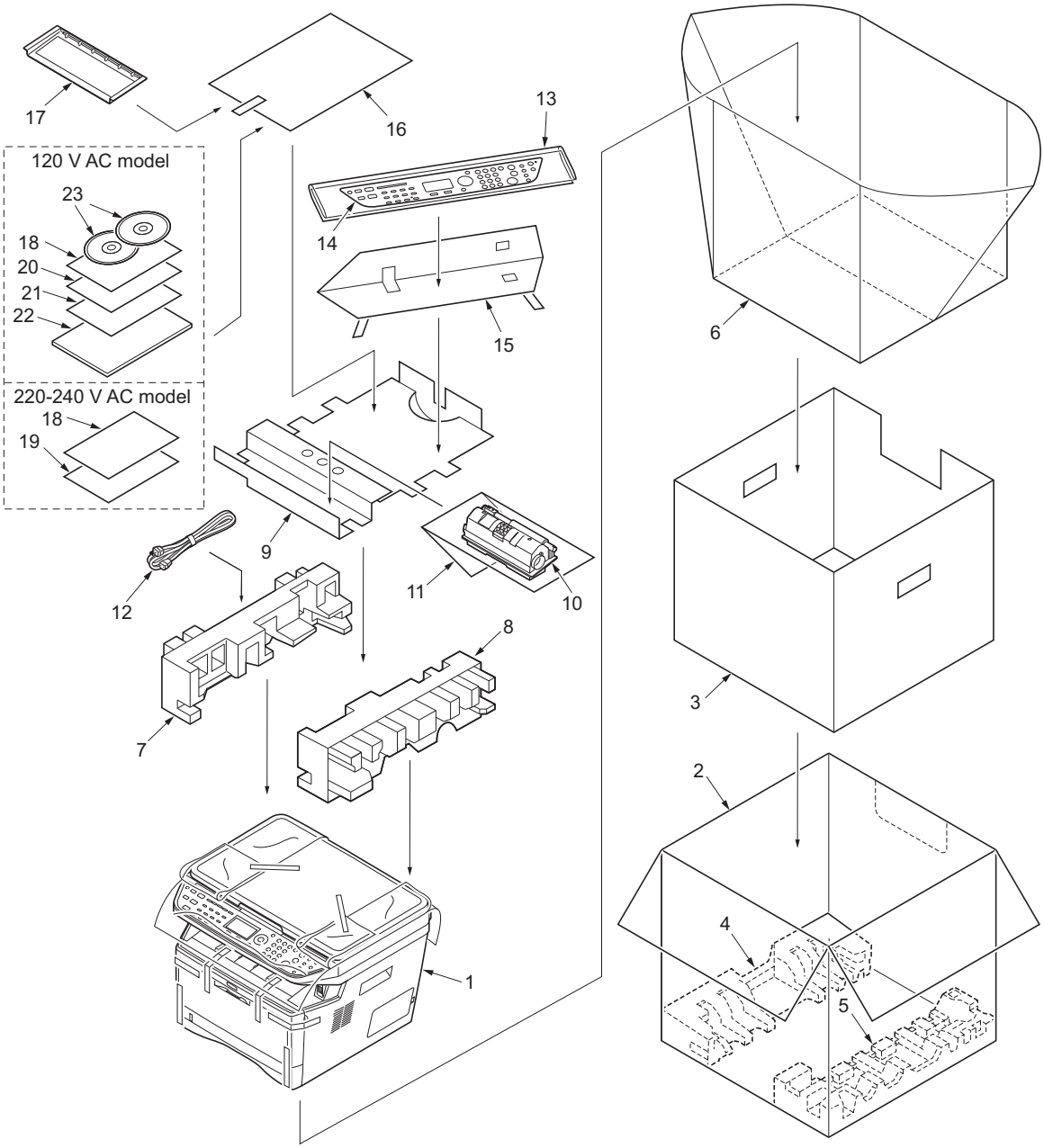

Figure 1-2-2

1. Printer
2. Outer case
3. Inner frame
4. Bottom pad L
5. Bottom pad R
6. Machine cover
7. Top pad L
8. Top pad R
9. Accessory spacer
10. Toner container
11. Plastic bag
12. Power cord
13. Plastic bag (250 × 600)
14. Operation labels
15. Operation label pad
16. Plastic bag (240 × 350)
17. Operation guide holder
18. Operation panel leaflet
19. EEA information leaflet**
20. Setup guide*
21. Quick guide*
22. Operation guide*
23. CD-ROMs*

* 120 V AC model only.
** 220-240 V AC model only.

(2) Removing the tapes

<Procedure>

1. Remove two tapes.
2. Open the sheet.

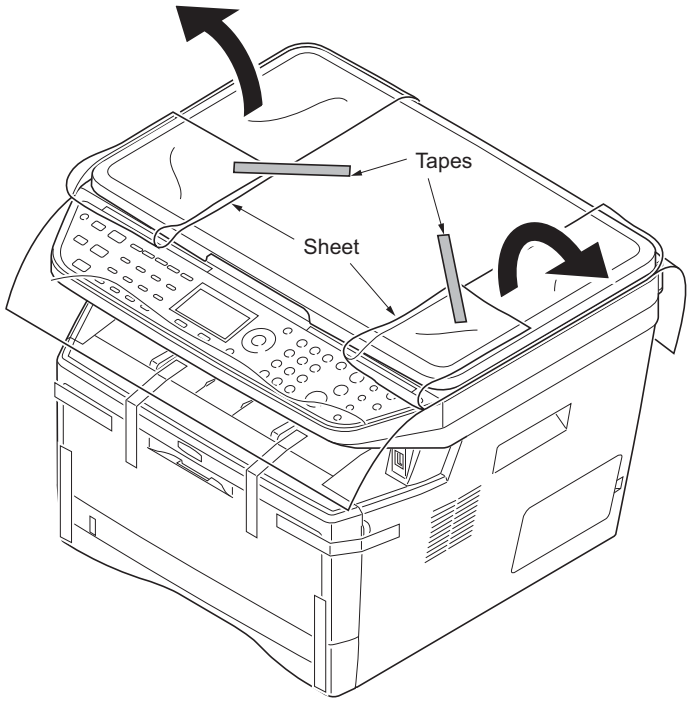

Figure 1-2-3

3. Open the original cover.
4. Remove the sheet.
5. Remove the paper.

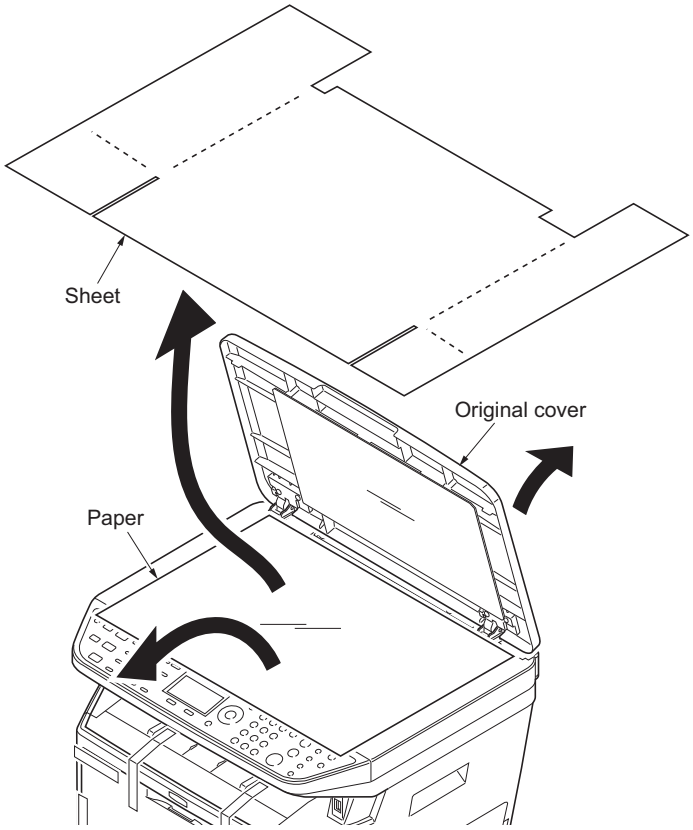

Figure 1-2-4

6. Remove nine tapes.

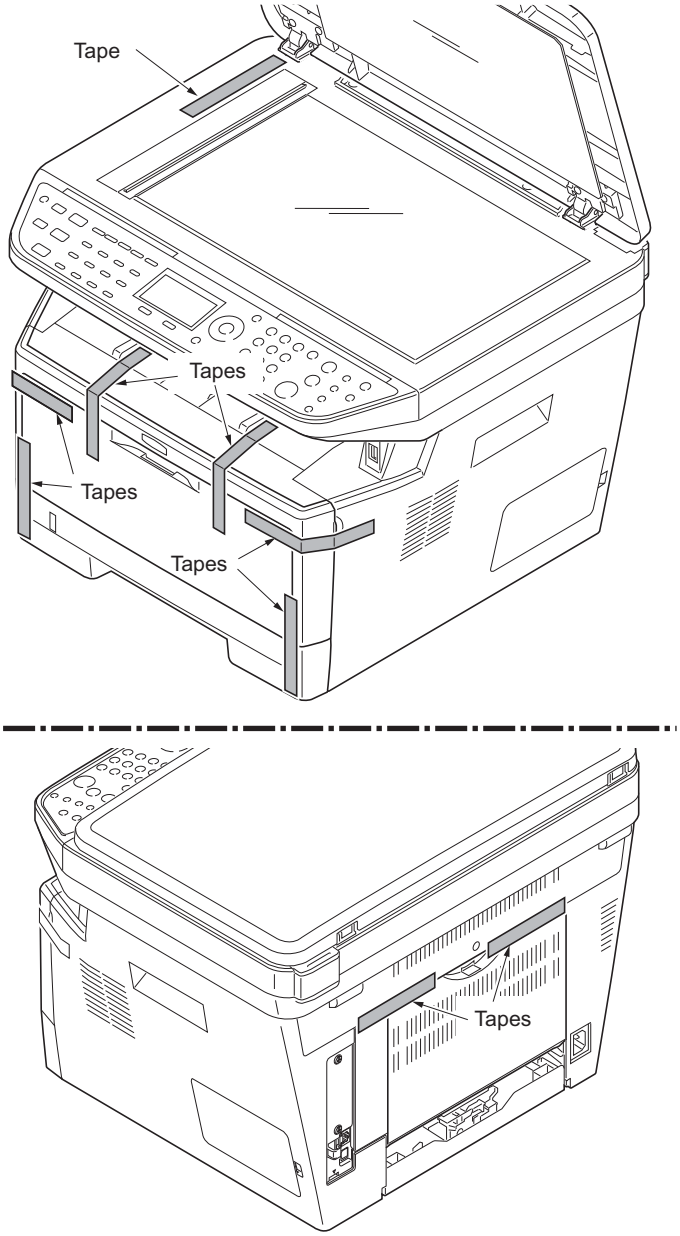

Figure 1-2-5

1-2-3 Installing the expansion memory (option)

<Procedure>

1. Turn off the main power switch.
   Caution: Do not insert or remove expansion memory while machine power is on.
   Doing so may cause damage to the machine and the expansion memory.
2. Remove the right side cover.
3. Remove the screw.

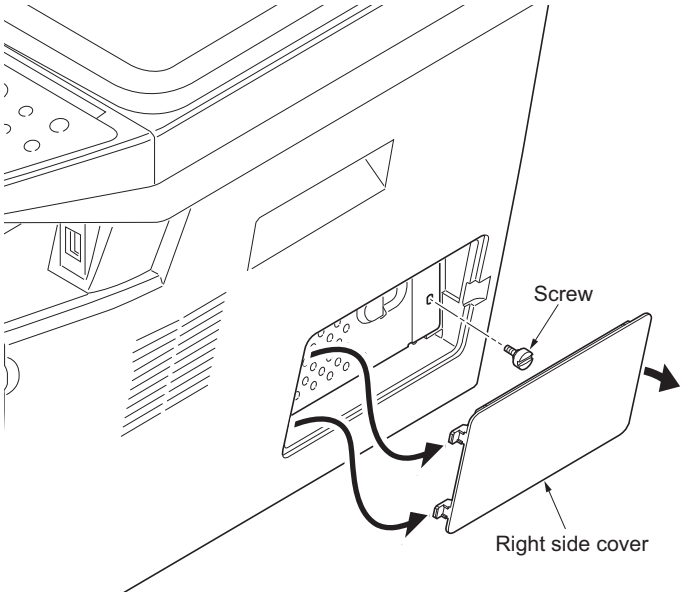

Figure 1-2-6

4. Open the memory slot cover.
5. Insert the expansion memory into the memory socket so that the notches on the memory align with the corresponding protrusions in the slot.
6. Close the memory slot cover.
7. Secure the screw.
8. Refit the right side cover.
9. Print a status page to check the memory expansion.
   If memory expansion has been properly performed, information on the installed memory is printed with the total memory capacity has been increased. Standard memory capacity 256 MB.

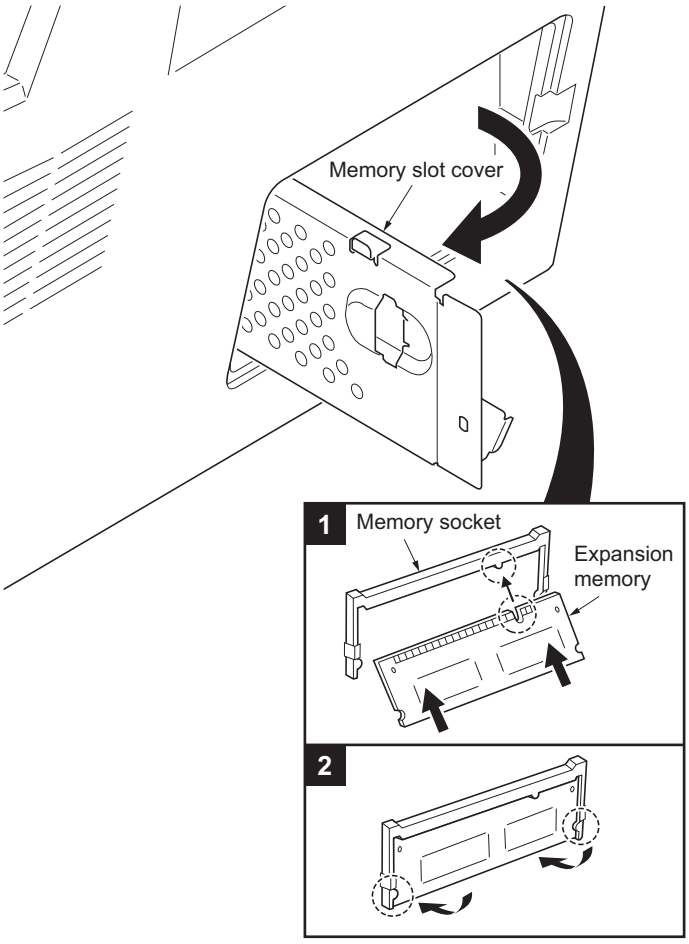

Figure 1-2-7

This page is intentionally left blank.

1-3-1 Maintenance mode

The machine is equipped with a maintenance function which can be used to maintain and service the machine.

(1) Executing a maintenance item

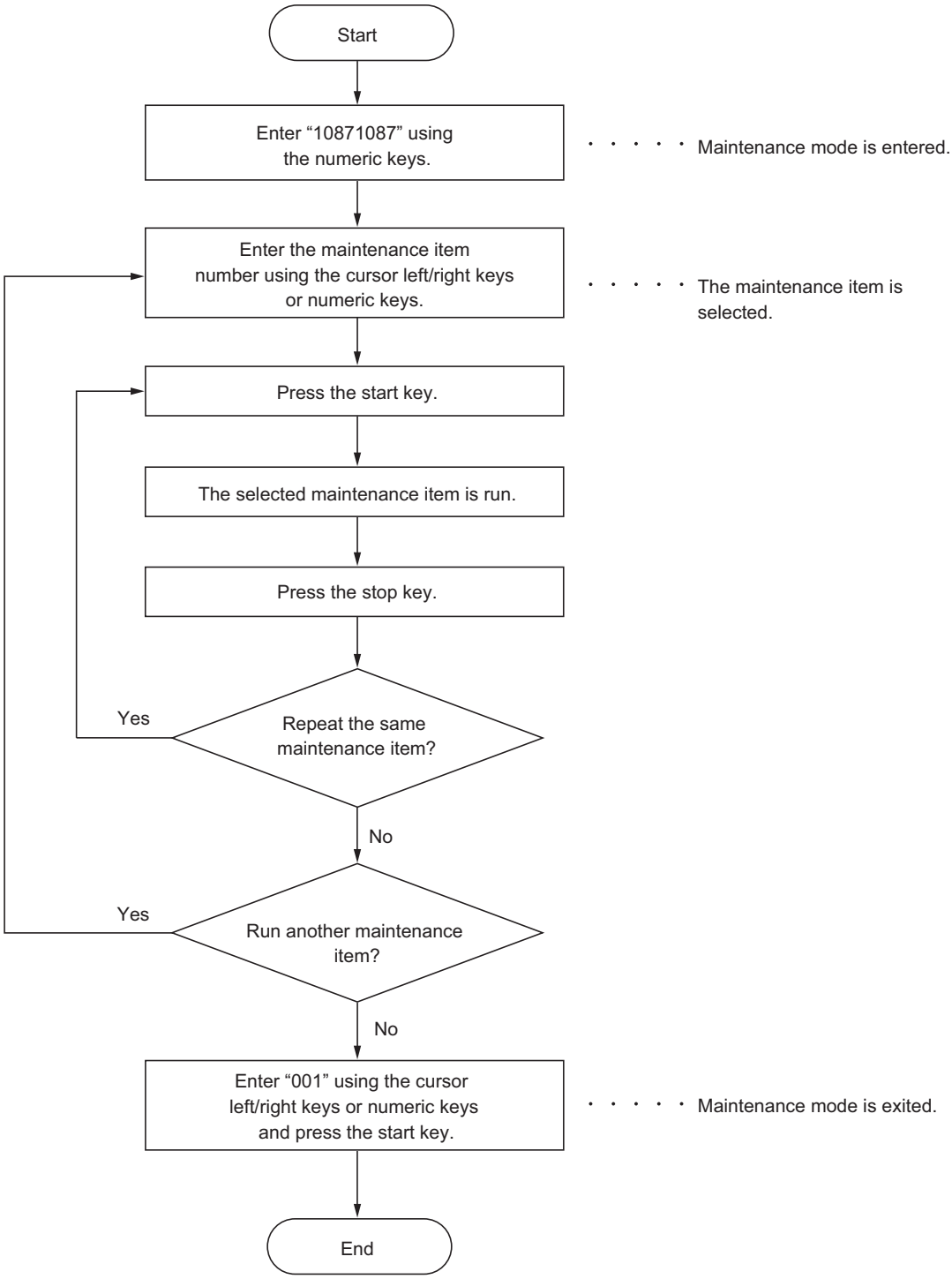

(2) Maintenance modes item list

Section	Item No.	Content of maintenance item	Initial setting*
General	U000	Outputting an own-status report	-
	U001	Exiting the maintenance mode	-
	U002	Setting the factory default data	-
	U004	Displaying the machine number	-
	U019	Displaying the ROM version	-
Initialization	U021	Initializing counters and mode settings	-
Drive, paper feed, paper conveying and cooling system	U030	Checking motor operation	-
	U031	Checking switch/sensor for paper conveying	-
	U032	Checking clutch operation	-
	U033	Checking solenoid operation	-
	U034	Adjusting the print start timing Adjusting the leading edge registration Adjusting the center line	541/0/0/0 235/0/0/0/0/0/0
	U051	Adjusting the deflection in the paper	0/0/0/0/0
	U053	Setting the adjustment of the motor speed	0
Optical	U063	Adjusting the shading position	0
	U065	Adjusting the scanner magnification Main scanning direction/auxiliary scanning direction	0/0
	U066	Adjusting the scanner leading edge registration	0/0
	U067	Adjusting the scanner center line	0/0
	U068	Adjusting the scanning position for originals from the DP	0/0
	U070	Adjusting the DP magnification	0
	U071	Adjusting the DP scanning timing	0/0/0/0/0
	U072	Adjusting the DP center line	0/0
	U073	Checking scanner operation	-
	U087	Setting DP reading position modification operation	125/125/120
	U089	Outputting a MIP-PG pattern	-
High voltage	U100	Setting the main high voltage	0
	U101	Setting the voltage for the primary transfer	0
	U111	Checking/clearing the drum drive time	-
	U113	Performing drum refresh operation	OFF/0
Developing	U130	Initial setting for the developing unit	-
	U144	Setting toner loading operation	1/3/8/20/1/2/3
	U157	Checking the developing drive time	-
Fuser and cleaning	U161	Setting the fuser control temperature	0/0/0/0/0/0/0
	U199	Checking the fuser temperature	-

*: Factory initial setting, *1: The item initialized for executing U021

Section	Item No.	Content of maintenance item	Initial setting*
Operation panel and support equipment	U200	Turning all LEDs on	-
	U203	Checking DP operation	-
	U207	Checking the operation panel keys	-
	U222	Setting the IC card type	-
	U223	Operation panel lock	-
	U243	Checking the operation of the DP motor solenoids and clutch	-
	U244	Checking the DP sensors	-
Mode setting	U250	Setting the maintenance cycle	100000*1
	U251	Checking/clearing the maintenance count	-
	U252	Setting the destination	-
	U253	Switching between double and single counts	Double count
	U260	Selecting the timing for copy counting	EJECT*1
	U265	Setting OEM purchaser code	0
	U278	Setting the delivery date	-
	U285	Setting service status page	ON
	U332	Setting the size conversion factor	1.0*1
	U342	Setting the ejection restriction	ON*1
	U343	Switching between duplex/simplex copy mode	OFF*1
	U345	Setting the value for maintenance due indication	0*1
Image processing	U402	Adjusting margins of image printing	30/25/25/50/50
	U403	Adjusting margins for scanning an original on the platen	2.0/2.0/2.0/5.0
	U404	Adjusting margins for scanning an original from the DP	3.0/2.5/3.0/4.0
	U407	Adjusting the leading edge registration for memory image printing	0
	U411	Adjusting the scanner automatically	-
	U425	Setting the target	-
Others	U901	Checking copy counts by paper feed locations	-
	U903	Checking/clearing the paper jam counts	-
	U904	Checking/clearing the service call counts	-
	U905	Checking/clearing counts by optional devices	-
	U908	Checking the total counter value	-
	U910	Clearing the black ratio data	-
	U911	Checking/clearing copy counts by paper sizes	-
	U917	Setting backup data reading/writing	-
	U920	Checking the copy counts	-
	U927	Clearing the all copy counts and machine life counts (one time only)	-
	U928	Checking machine life counts	-
	U942	Setting of deflection for feeding from DP	0/0
	U969	Checking of toner area code	-
	U977	Data capture mode	-
	U991	Checking the scanner count	-
	U993	Outputting a VTC-PG pattern	-

*: Factory initial setting, *1: The item initialized for executing U021

(3) Contents of the maintenance mode items

Maintenance item No.	Description
U000	**Outputting an own-status report** **Description** Outputs lists of the current settings of the maintenance items and paper jam and service call occurrences. Outputs the event log. Also sends output data to the USB memory. Printing a report is disabled either when a job is remaining in the buffer or when [Pause All Print Jobs] is pressed to halt printing. **Purpose** To check the current setting of the maintenance items, or paper jam or service call occurrences. Before initializing or replacing the backup RAM, output a list of the current settings of the maintenance items to reenter the settings after initialization or replacement. **Method** 1. Press the start key. 2. Select the item to be output using the cursor up/down keys. **Display** / **Output list** MAINTENANCE / List of the current settings of the maintenance modes EVENT / Outputs the event log ALL / Outputs the all reports 3. Press the start key. The interrupt print mode is entered and a list is output. When A4/Letter paper is available, a report of this size is output. If not, specify the paper feed location. When output is complete, the screen for selecting an item is displayed. **Method: Send to the USB memory** 1. Press the power key on the operation panel, and after verifying the main power indicator has gone off, switch off the main power switch. 2. Insert USB memory in USB memory slot. 3. Turn the main power switch on. 4. Enter the maintenance item. 5. Press the start key. 6. Select the item to be send. 7. Select [TEXT] or [HTML]. **Display** / **Output list** Print / Outputs the report USB (TEXT) / Sends output data to the USB memory (text type) USB (HTML) / Sends output data to the USB memory (HTML type) 8. Press the start key. Output will be sent to the USB memory.

Maintenance item No.	Description
U000	**Event log**

Event Log

MFP

Firmware version 2H9_2F00.001.177 (1) 2009.04.17 (2)

(3) **Paper Jam Log**

#	Count.	Event Descriprions
16	9876543	10.01.08.01.01
15	666554	10.01.08.01.02
14	4988	10.01.08.01.01
13	4988	10.01.08.01.02
12	4988	
11	4988	
10	1103	
9	1103	
8	1103	12.03.08.01.01
7	1103	12.03.08.01.01
6	1027	12.03.08.01.01
5	1027	12.03.0A.01.01
4	1027	12.03.08.01.01
3	1027	12.03.08.01.02
2	550	12.03.0A.01.01
1	28	12.03.08.01.01

10. 01. 08. 01. 01
(a) (b) (c) (d) (e)

(4) **Service Call Log**

#	Count.	Service Code
8	7881214	01.0060
7	578944	01.0120
6	5296	01.4000
5	5295	01.3100
4	2099	01.2000
3	1054	01.2000
2	809	01.2200
1	30	01.2500

(5) **Maintenance Log**

#	Count.	Item
8	9045571	01.00
7	704511	02.00
6	7045	01.00
5	3454	02.00
4	3454	01.00
3	3454	02.00
2	417	01.00
1	35	02.00

(6) **Unknown toner Log**

#	Count.	Item
5	3454	01.00
4	3454	01.00
3	3454	01.00
2	417	01.00
1	35	01.00

(7) **Counter Log**

(f) J10:000 J11:000 J12:000 J20:002 J21:000 J22:000 J30:000 J31:000 J73:000 J74:000 J78:000

(g) C0100:001 C0110:001 C0120:001 C0150:001 C0170:001 C0420:001 C2000:001 C2610:001 C2620:001

(h) M00:01

Detail of event log

No.	Items	Description		
(1)	System version			
(2)	System date			
(3)	Paper Jam Log	#	Count.	Event
		Remembers 1 to 16 of occurrence. If the occurrence of the previous paper jam is less than 16, all of the paper jams are logged. When the occurrence excesseds 16, the oldest occurrence is removed.	The total page count at the time of the paper jam.	Log code (2 digit, hexadecimal, 5 categories) (a) Cause of a paper jam (b) Paper source (c) Paper size (d) Paper type (e) Paper eject

Maintenance item No.	Description
U000	

No.	Items	Description
(3) cont.	Paper Jam Log	(a) Cause of paper jam (Hexadecimal)
		10: Paper does not arrive at the registration sensor. (MP tray) [42] 10: Paper does not arrive at the registration sensor. (Cassette 1) [31] 10: Paper does not arrive at the registration sensor. (Cassette 2) [31] 10: Paper does not arrive at the registration sensor. (Cassette 3) [31] 10: Paper does not arrive at the registration sensor. (Duplex conveying) [49] 11: Paper does not pass the registration sensor. [48] 12: Paper remains at the registration sensor when power is turned on. [48] 20: Paper does not arrive at the exit sensor. [48] 21: Paper does not pass the exit sensor. [47] 22: Paper remains at the exit sensor when power is turned on. [47] 30: Paper does not arrive at the paper feeder 1's PF paper feed sensor. (Cassette 2) [32] 30: Paper does not arrive at the paper feeder 1's PF paper feed sensor. (Cassette 3) [33] 31: Paper does not pass the paper feeder 1's PF paper feed sensor. (Cassette 2) [32] 32: Paper remains at the paper feeder 1's PF paper feed sensor when power is turned on. (Cassette 2) [32] 40: Paper does not arrive at the paper feeder 2's PF paper feed sensor. (Cassette 3) [33] 41: Paper does not pass the paper feeder 2's PF paper sensor. (Cassette 3) [33] 42: Paper remains at the paper feeder 2's PF paper feed sensor when power is turned on. (Cassette 3) [33] 70: No original feed. (DP) [50] 71: An original jam in the original conveying section 1. (DP) [50] 72: An original jam in the original conveying section 2. (DP) [50] 73: An original jam in the original switchback section. (DP) [50] 74: An original jam in the original switchback/feed section. (DP) [50] 78: Top cover open. (DP) [50] A1: Paper does not arrive at the exit sensor. [47] A3: Paper does not pass the exit sensor. [49] E0: Paper misfeed occurs due to forced stop when an error occurs during printing. (such as opening of a cover) [00] F0 to FE: Paper misfeed by another cause. [00] Note: Values (hexadecimal) within [ ] indicate paper misfeed locations.

Maintenance item No.	Description
U000	

No.	Items	Description
(3) cont.	Paper Jam Log	

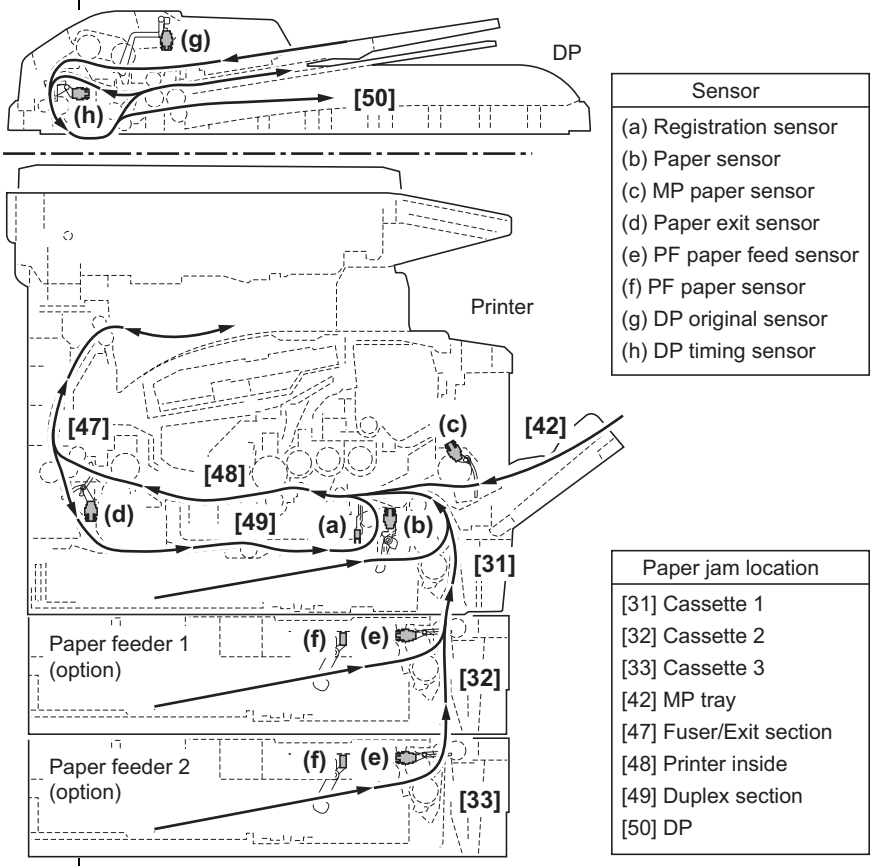

(b) Detail of paper source (Hexadecimal)

00: MP tray
01: Cassette 1
02: Cassette 2 (paper feeder)
03: Cassette 3 (paper feeder)
04 to 09: Reserved

Maintenance item No.	Description
U000	

No.	Items	Description		
(3) cont.	Paper Jam Log	(c) Detail of paper size (Hexadecimal)		
		01: Monarch 02: Business 03: International DL 04: International C5 05: Executive 06: Letter-R 86: Letter-E 07: Legal 08: A4R 88: A4E 09: B5R 89: B5E 0A: A3 0B: B4	0C: Ledger 0D: A5 0E: A6 0F: B6 10: Commercial #9 11: Commercial #6 12: ISO B5 13: Custom size 1E: C4 1F: Postcard 20: Reply-paid postcard 21: Oficio II 22: Special 1 23: Special 2	24: A3 wide 25: Ledger wide 26: Full bleed paper (12 x 8) 27: 8K 28: 16K-R A8: 16K-E 32: Statement-R B2: Statement-E 33: Folio 34: Western type 2 35: Western type 4
		(d) Detail of paper type (Hexadecimal)		
		01: Plain 02: Transparency 03: Preprinted 04: Labels 05: Bond 06: Recycled 07: Vellum 08: Rough 09: Letterhead	0A: Color 0B: Prepunched 0C: Envelope 0D: Cardstock 0E: Coated 0F: 2nd side 10: Media 16 11: High quality	15: Custom 1 16: Custom 2 17: Custom 3 18: Custom 4 19: Custom 5 1A: Custom 6 1B: Custom 7 1C: Custom 8
		(e) Detail of paper exit location (Hexadecimal)		
		01: Face down (FD)		
(4)	Service Call Log	#	Count.	Service Code
		Remembers 1 to 8 of occurrence of self diagnostics error. If the occurrence of the previous diagnostics error is less than 8, all of the diagnostics errors are logged.	The total page count at the time of the self diagnostics error.	Self diagnostic error code (See page 1-4-3) Example: 01.6000 01: Self diagnostic error 6000: Self diagnostic error code number

Maintenance item No.	Description
U000	

No.	Items	Description		
(5)	Maintenance Log	#	Count.	Item
		Remembers 1 to 8 of occurrence of replacement. If the occurrence of the previous replacement of toner container is less than 8, all of the occurrences of replacement are logged.	The total page count at the time of the replacement of the toner container.	Code of maintenance replacing item (1 byte, 2 categories) First byte (Replacing item) 01: Toner container 02: Maintenance kit Second byte (Type of replacing item) 00: Black 01: MK-130/MK-132
(6)	Unknown Toner Log	#	Count.	Item
		Remembers 1 to 5 of occurrence of unknown toner detection. If the occurrence of the previous unknown toner detection is less than 5, all of the unknown toner detection are logged.	The total page count at the time of the [Toner Empty] error with using an unknown toner container.	Unknown toner log code (1 byte, 2 categories) First byte 01: Fixed (Toner container) Second byte 00: Fixed (Black)
(7)	Counter Log Comprised of three log counters including paper jams, self diagnostics errors, and replacement of the toner container.	(f) Paper jam	(g) Self diagnostic error	(h) Maintenance item replacing
		Indicates the log counter of paper jams depending on location. Refer to Paper Jam Log. All instances including those are not occurred are displayed.	Indicates the log counter of self diagnostics errors depending on cause. (See page 1-4-3) Example: C6000: 4 Self diagnostics error 6000 has happened four times.	Indicates the log counter depending on the maintenance item for maintenance. T: Toner container 00: Black M: Maintenance kit 00: MK-130/MK-132 Example: T00: 1 The toner container has been replaced once.

Completion
Press the stop key. The screen for selecting a maintenance item No. is displayed.

<table>
<tr><th>Maintenance item No.</th><th>Description</th></tr>
<tr><td>U001</td><td>
Exiting the maintenance mode
Description
Exits the maintenance mode and returns to the normal copy mode.
Purpose
To exit the maintenance mode.
Method
Press the start key. The normal copy mode is entered.
</td></tr>
<tr><td>U002</td><td>
Setting the factory default data
Description
Restores the machine conditions to the factory default settings.
Purpose
To move the mirror frame of the scanner to the position for transport (position in which the frame can be fixed).
Method
1. Press the start key.
2. Select [MODE1(ALL)] using the cursor up/down keys.
3. Press the start key.
The mirror frame of the scanner returns to the position for transport.
4. Turn the main power switch off and on.

An error code is displayed in case of an initialization error. Refer to the table of the error codes on P.1-3-11. When errors occurred, turn main power switch off then on, and execute initialization using maintenance item U002.
</td></tr>
<tr><td>U004</td><td>
Displaying the machine number
Description
Displays the machine number.
Purpose
To check the machine number.
Method
Press the start key. The currently machine number is displayed.
Completion
Press the stop key. The screen for selecting a maintenance item No. is displayed.
</td></tr>
<tr><td>U019</td><td>
Displaying the ROM version
Description
Displays the part number of the ROM fitted to each PWB.
Purpose
To check the part number or to decide, if the newest version of ROM is installed.
Method
1. Press the start key. The ROM version are displayed.
2. Change the screen using the cursor up/down keys.
<table>
<tr><th>Display</th><th>Description</th></tr>
<tr><td>MAIN</td><td>Control PWB ROM</td></tr>
<tr><td>MMI</td><td>Operation panel PWB ROM</td></tr>
<tr><td>ENGINE</td><td>Engine ROM</td></tr>
<tr><td>ENGINE BOOT</td><td>Engine booting</td></tr>
<tr><td>CASS 2</td><td>Optional paper feeder main PWB ROM</td></tr>
<tr><td>CASS 3</td><td>Optional paper feeder main PWB ROM</td></tr>
<tr><td>SCANNER</td><td>Scanner PWB ROM</td></tr>
<tr><td>SCANNER BOOT</td><td>Scanner PWB booting</td></tr>
<tr><td>OPTION LANGUAGE</td><td>Optional language ROM</td></tr>
</table>
Completion
Press the stop key. The screen for selecting a maintenance item No. is displayed.
</td></tr>
</table>

Maintenance item No.	Description
U021	**Initializing counters and mode settings** **Description** Initializes all settings, except those pertinent to the type of machine, namely each counter, service call history and mode setting. Also initializes backup RAM according to region specification selected in maintenance item U252 Setting the destination. Refer to *1 of the maintenance mode item list about the item initialized. **Purpose** To return the machine settings to their factory default. **Method** 1. Press the start key. 2. Select [EXECUTE] using the cursor up/down keys. 3. Press the start key. All data other than that for adjustments due to variations between machines is initialized based on the destination setting. 4. Turn the main power switch off and on. An error code is displayed in case of an initialization error. When errors occurred, turn main power switch off then on, and execute initialization using maintenance item U021. **Error codes**

Codes	Description
ERROR 01	Configuration initialization error
ERROR 02	Counter initialization error
ERROR 03	One-touch initialization error
ERROR 04	Panel program initialization error
ERROR 05	Event log initialization error
ERROR 06	Account initialization error
ERROR 07	Address book initialization error
ERROR 08	Department initialization error
ERROR 09	Document box initialization error
ERROR 0a	Permissibility initialization error
ERROR 0b	Job log initialization error
ERROR 20	Engine initialization error
ERROR 40	Scanner initialization error

<table>
<tr><th>Maintenance item No.</th><th>Description</th></tr>
<tr><td>U030</td><td>
Checking motor operation
Description
Drives each motor.
Purpose
To check the operation of each motor.
Method
1. Press the start key.
2. Select the motor to be operated using the cursor up/down keys.
3. Press the start key. The operation starts.
<table>
<tr><th>Display</th><th>Operation</th></tr>
<tr><td>MAIN</td><td>Main motor operates</td></tr>
<tr><td>PAPER FEEDER 1</td><td>PF paper feed motor* operates</td></tr>
<tr><td>PAPER FEEDER 2</td><td>PF paper feed motor* operates</td></tr>
</table>
*: Option.
4. To stop operation, press the stop key.
Completion
Press the stop key. The screen for selecting a maintenance item No. is displayed.
</td></tr>
<tr><td>U031</td><td>
Checking switch/sensor for paper conveying
Description
Displays the on-off status of each paper detection switch/sensor on the paper path.
Purpose
To check if the switch/sensor for paper conveying operate correctly.
Method
1. Press the start key.
2. Turn each switch/sensor on and off manually to check the status.
When a switch/sensor is detected to be in the ON position, the display for that switch/sensor will be “1”.
<table>
<tr><th>Display</th><th>Switch and sensors</th></tr>
<tr><td>WHOLE 0 0 0 0</td><td>Cassette switch/Paper sensor/MP paper sensor/Registration sensor</td></tr>
<tr><td>EXIT 0</td><td>Exit sensor</td></tr>
<tr><td>PAPER FEED 1 0 0 0</td><td>PF cassette switch*/PF paper sensor*/PF paper feed sensor*</td></tr>
<tr><td>PAPER FEED 2 0 0 0</td><td>PF cassette switch*/PF paper sensor*/PF paper feed sensor*</td></tr>
</table>
*: Option.
Completion
Press the stop key. The screen for selecting a maintenance item No. is displayed.
</td></tr>
</table>

<table>
<tr><th>Maintenance item No.</th><th>Description</th></tr>
<tr><td>U032</td><td>
Checking clutch operation
Description
Turns each clutch on.
Purpose
To check the operation of each clutch.
Method
1. Press the start key.
2. Select the clutch to be operated using the cursor up/down keys.
3. Press the start key. The clutch turns on.
<table>
<tr><th>Display</th><th>Clutches</th></tr>
<tr><td>FEED CL</td><td>Paper feed clutch operates</td></tr>
<tr><td>REG CL</td><td>Registration clutch operates</td></tr>
<tr><td>DLP CL</td><td>Developing clutch operates</td></tr>
<tr><td>FEED CL(PF1)</td><td>PF paper feed clutch* operates</td></tr>
<tr><td>TRANS CL(PF1)</td><td>PF paper conveying clutch* operates</td></tr>
<tr><td>FEED CL(PF2)</td><td>PF paper feed clutch* operates</td></tr>
<tr><td>TRANS CL(PF2)</td><td>PF paper conveying clutch* operates</td></tr>
</table>
*: Option.
4. To stop driving motors, press the stop key.
Completion
Press the stop key. The screen for selecting a maintenance item No. is displayed.
</td></tr>
<tr><td>U033</td><td>
Checking solenoid operation
Description
Applies current to each solenoid in order to check its ON status.
Purpose
To check the operation of each solenoid.
Method
1. Press the start key.
2. Select the solenoid to be operated using the cursor up/down keys.
3. Press the start key. The solenoid turns on.
<table>
<tr><th>Display</th><th>Solenoids</th></tr>
<tr><td>MPF SOL</td><td>MP paper feed solenoid operates</td></tr>
<tr><td>DU SOL</td><td>Duplex solenoid operates</td></tr>
<tr><td>FD SOL</td><td>Face down solenoid operation</td></tr>
</table>
*Option.
4. To stop driving motors, press the stop key.
Completion
Press the stop key. The screen for selecting a maintenance item No. is displayed.
</td></tr>
</table>

Maintenance item No.	Description
U034	

Adjusting the print start timing

Description

Adjusts the leading edge registration or center line.

Purpose

Make the adjustment if there is a regular error between the leading edges of the copy image and original.
Make the adjustment if there is a regular error between the center lines of the copy image and original.

Caution

Before performing this adjustment, perform the procedure under section “U053 Setting the adjustment of the motor speed”.

Method

1. Press the start key.
2. Select the item to be adjusted using the cursor up/down keys.
3. Press the start key.

Display	Description
LSU OUT TOP	Leading edge registration adjustment
LSU OUT LEFT	Center line adjustment

Adjustment: Leading edge registration adjustment

1. Select the item to be adjusted using the cursor up/down keys.

Display	Description	Setting range	Initial setting	Change in value per step
TOP	Adjustment of reference value	0 to 1180	541	0.04 mm
MP TRAY	Paper feed from MP tray*	-70 to 70	0	0.04 mm
CASSETTE	Paper feed from cassette*	-70 to 70	0	0.04 mm
DUPLEX	Duplex mode (second side)*	-70 to 70	0	0.04 mm

*: Setting the difference value from reference value

2. Press the system menu/counter key.
3. Press the start key to output a test pattern.
4. Press the system menu/counter key.
5. Change the setting value using the cursor left/right keys or numeric keys.
   Perform adjustment so that the image fits in the middle of the page.
   For output example 1, decrease the value. For output example 2, increase the value.

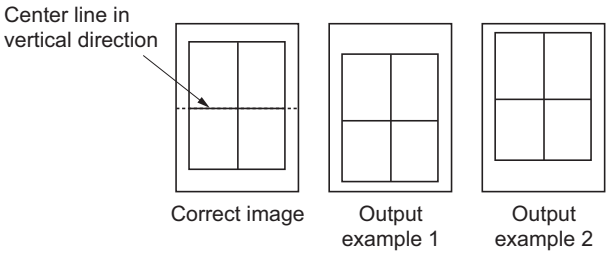

Figure 1-3-1

6. Press the start key. The value is set.

Caution

Check the copy image after the adjustment. If the image is still incorrect, perform the following adjustments in maintenance mode.

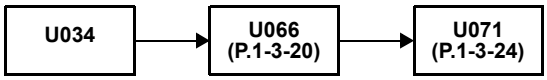

Maintenance item No.	Description
U034	

Adjustment: Center line adjustment

1. Select the item to be adjusted using the cursor up/down keys.

Display	Description	Setting range	Initial setting	Change in value per step
LEFT	Adjustment of reference value	0 to 1180	235	0.04 mm
MP TRAY	Paper feed from MP tray*	-70 to 70	0	0.04 mm
CASSETTE 1	Paper feed from cassette 1*	-70 to 70	0	0.04 mm
CASSETTE 2	Paper feed from optional cassette 2*	-70 to 70	0	0.04 mm
CASSETTE 3	Paper feed from optional cassette 3*	-70 to 70	0	0.04 mm
DUPLEX	Duplex mode (second side)*	-70 to 70	0	0.04 mm

*: Setting the difference value from reference value

2. Press the system menu/counter key.
3. Press the start key to output a test pattern.
4. Press the system menu/counter key.
5. Change the setting value using the cursor left/right keys or numeric keys.
   For output example 1, decrease the value. For output example 2, increase the value.

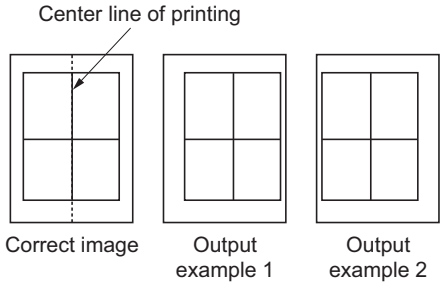

Figure 1-3-2

6. Press the start key. The value is set.

Caution

Check the copy image after the adjustment. If the image is still incorrect, perform the following adjustments in maintenance mode.

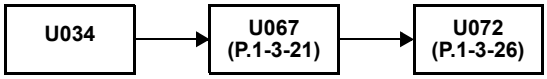

Completion

Press the stop key. The screen for selecting a maintenance item No. is displayed.

Maintenance item No.	Description
U051	**Adjusting the deflection in the paper**

Description

Adjusts the deflection in the paper.

Purpose

Make the adjustment if the leading edge of the copy image is missing or varies randomly, or if the copy paper is Z-folded.

Adjustment

1. Press the start key.
2. Select the item to be adjusted using the cursor up/down keys.

Display	Description	Setting range	Initial setting	Change in value per step
DELAY BASE	Adjustment of deflection in the paper	-128 to 127	0	1 mm
REGIST CAS1	Paper feed from cassette	-128 to 127	0	1 mm
REGIST CAS2	Paper feed from optional cassette	-128 to 127	0	1 mm
REGIST CAS3	Paper feed from optional cassette	-128 to 127	0	1 mm
DUPLEX	Duplex mode (second side)	-128 to 127	0	1 mm

3. Press the system menu/counter key.
4. Place an original and press the start key to make a test copy.
5. Press the system menu/counter key.
6. Change the setting value using the cursor left/right keys or numeric keys.
   For output example 1, increase the value. For output example 2, decrease the value.
   The greater the value, the larger the deflection; the smaller the value, the smaller the deflection.

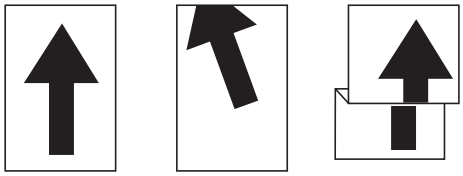

Original | Copy example 1 | Copy example 2

Figure 1-3-3

7. Press the start key. The value is set.
8. Turn the main power switch off and on.

Maintenance item No.	Description
U053	**Setting the adjustment of the motor speed** **Description** Performs fine adjustment of the speeds of the motor. **Purpose** To adjust the speed of the motor when the magnification in the auxiliary scanning direction is not correct. **Method** 1. Press the start key.

Display	Description	Setting range	Initial setting	Change in value per step
MAIN MOTOR	Main motor speed adjustment	-50 to 50	0	0.5%

Adjustment

1. Press the system menu/counter key.
2. Press the start key to output a VTC pattern.

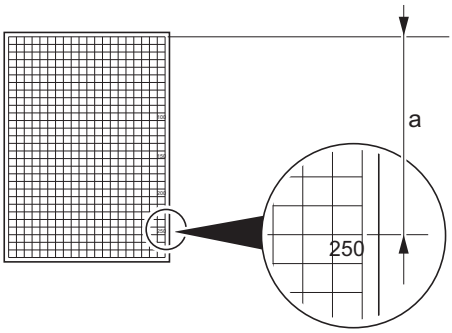

Correct value: a = 250 ± 1.0 mm

Figure 1-3-4

3. Press the system menu/counter key.
4. Change the setting value using the cursor left/right keys or numeric keys.
   Increasing the setting makes the image longer in the auxiliary scanning direction, and decreasing it makes the image shorter in the auxiliary scanning direction.
5. Press the start key. The value is set.
6. Turn the main power switch off and on.

Maintenance item No.	Description
U063	**Adjusting the shading position** **Description** Changes the shading position of the scanner. **Purpose** Used when white lines continue to appear longitudinally on the image after the shading plate is cleaned. This is due to flaws or stains inside the shading plate. To prevent this problem, the shading position should be changed so that shading is possible without being affected by the flaws or stains. **Method** 1. Press the start key. 2. Change the setting using the cursor left/right keys or numeric keys. Increasing the setting moves the shading position toward the machine left, and decreasing it moves the position toward the machine right. 3. Press the start key. The value is set. **Supplement** While this maintenance item is being executed, copying from an original is available in interrupt copying mode (which is activated by pressing the system menu/counter key). **Completion** Press the stop key. The screen for selecting a maintenance item No. is displayed.

Description	Setting range	Initial setting	Change in value per step
Shading position	-32 to 20	0	0.086 mm

Maintenance item No.	Description
U065	

Adjusting the scanner magnification

Description

Adjusts the magnification of the original scanning.

Purpose

Make the adjustment if the magnification in the main scanning direction is incorrect.
Make the adjustment if the magnification in the auxiliary scanning direction is incorrect.

Caution

Adjust the magnification of the scanner in the following order.

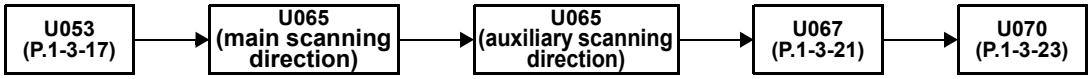

Method

1. Press the start key.
2. Select the item to be adjusted using the cursor up/down keys.

Display	Description	Setting range	Initial setting	Change in value per step
Y SCAN ZOOM	Scanner magnification in the main scanning direction	-32 to 127	0	0.1%
X SCAN ZOOM	Scanner magnification in the auxiliary scanning direction	-25 to 25	0	0.1%

Adjustment: Main scanning direction

1. Press the system menu/counter key.
2. Place an original and press the start key to make a test copy.
3. Press the system menu/counter key.
4. Change the setting value using the cursor left/right keys or numeric keys.
   For copy example 1, increase the value. For copy example 2, decrease the value.

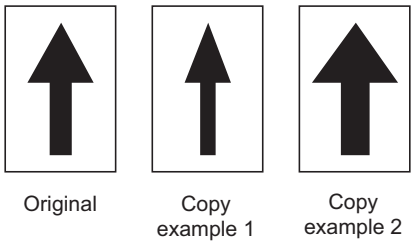

Figure 1-3-5

5. Press the start key. The value is set.

Adjustment: Auxiliary scanning direction

1. Press the system menu/counter key.
2. Place an original and press the start key to make a test copy.
3. Press the system menu/counter key.
4. Change the setting value using the cursor left/right keys or numeric keys.
   For copy example 1, increase the value. For copy example 2, decrease the value.

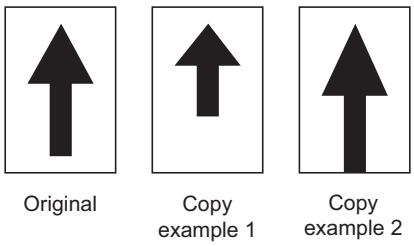

Figure 1-3-6

5. Press the start key. The value is set.

Completion

Press the stop key. The screen for selecting a maintenance item No. is displayed.

Maintenance item No.	Description
U066	

Adjusting the scanner leading edge registration

Description

Adjusts the scanner leading edge registration of the original scanning.

Purpose

Make the adjustment if there is a regular error between the leading edges of the copy image and original.

Adjustment

1. Press the start key.
2. Select the item to be adjusted using the cursor up/down keys.

Display	Description	Setting range	Initial setting	Change in value per step
FRONT	Scanner leading edge registration	-45 to 45	0	0.086 mm
TAIL	Scanner leading edge registration (rotate copying)	-45 to 45	0	0.086 mm

3. Press the system menu/counter key.
4. Place an original and press the start key to make a test copy.
5. Press the system menu/counter key.
6. Change the setting value using the cursor left/right keys or numeric keys.
   For copy example 1, increase the value. For copy example 2, decrease the value.

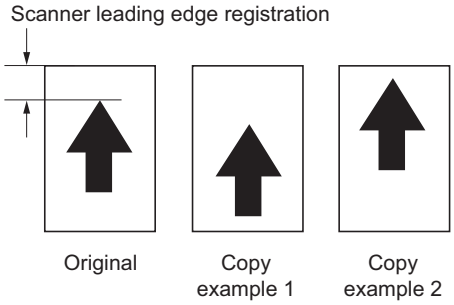

Figure 1-3-7

7. Press the start key. The value is set.

Caution

Check the copy image after the adjustment. If the image is still incorrect, perform the following adjustments in maintenance mode.

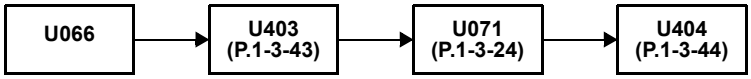

Completion

Press the stop key. The screen for selecting a maintenance item No. is displayed.

Maintenance item No.	Description
U067	

Adjusting the scanner center line

Description

Adjusts the scanner center line of the original scanning.

Purpose

Make the adjustment if there is a regular error between the center lines of the copy image and original.

Adjustment

1. Press the start key.
2. Select the item to be adjusted using the cursor up/down keys.

Display	Description	Setting range	Initial setting	Change in value per step
FRONT	Scanner center line	-70 to 70	0	0.085 mm
ROTATE	Scanner center line (rotate copying)	-40 to 40	0	0.085 mm

3. Press the system menu/counter key.
4. Place an original and press the start key to make a test copy.
5. Press the system menu/counter key.
6. Change the setting value using the cursor left/right keys or numeric keys.
   For copy example 1, decrease the value. For copy example 2, increase the value.

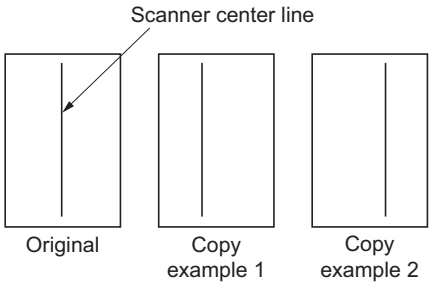

Figure 1-3-8

7. Press the start key. The value is set.

Caution

Check the copy image after the adjustment. If the image is still incorrect, perform the following adjustments in maintenance mode.

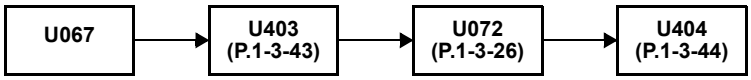

Completion

Press the stop key. The screen for selecting a maintenance item No. is displayed.

Maintenance item No.	Description
U068	**Adjusting the scanning position for originals from the DP** **Description** Adjusts the position for scanning originals from the DP. Performs the test copy at the four scanning positions after adjusting. **Purpose** Used when the image fogging occurs because the scanning position is not proper when the DP is used. Run U071 to adjust the timing of DP leading edge when the scanning position is changed. **Setting** 1. Press the start key. 2. Select [DP READ]. 3. Change the setting using the cursor left/right keys or numeric keys. When the setting value is increased, the scanning position moves to the right and it moves to the left when the setting value is decreased. 4. Press the start key. The value is set. 5. Select [BLACK LINE] using the cursor up/down keys. 6. Select the scanning position using the cursor left/right keys or numeric keys. 7. Press the start key. The value is set. 8. Set the original (the one which density is known) in the DP and press the system menu/counter key. The screen for the test copy mode is displayed. 9. Press the start key. Test copy is executed. 10. Perform the test copy at each scanning position with the setting value from 0 to 3 and check that no black line appears and the image is normally scanned. **Completion** Press the stop key. The screen for selecting a maintenance item No. is displayed.

Display	Description	Setting range	Initial setting	Change in value per step
DP READ	Starting position adjustment for scanning originals	-33 to 33	0	0.086 mm
BLACK LINE	Scanning position for the test copy originals	0 to 3	0	0.22 mm

Maintenance item No.	Description
U070	

Adjusting the DP magnification

Description

Adjusts the DP original scanning speed.

Purpose

Make the adjustment if the magnification is incorrect in the auxiliary scanning direction when the DP is used.

Method

1. Press the start key.

Display	Description	Setting range	Initial setting	Change in value per step
CONVEY SPEED	Magnification in the auxiliary scanning direction	-25 to 25	0	0.1%

Adjustment

1. Press the system menu/counter key.
2. Place an original on the DP and press the start key to make a test copy.
3. Press the system menu/counter key.
4. Change the setting value using the cursor left/right keys or numeric keys.
   For copy example 1, increase the value. For copy example 2, decrease the value.

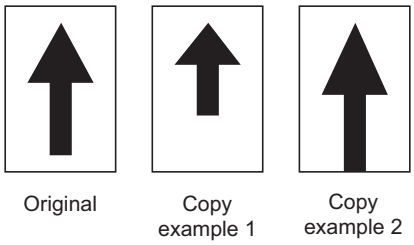

Figure 1-3-9

5. Press the start key. The value is set.

Caution

Check the copy image after the adjustment. If the image is still incorrect, perform the following adjustments in maintenance mode.

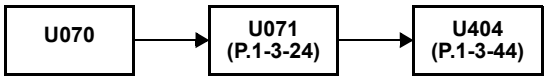

Completion

Press the stop key. The screen for selecting a maintenance item No. is displayed.

Maintenance item No.	Description
U071	

Adjusting the DP scanning timing

Description

Adjusts the DP original scanning timing.

Purpose

Make the adjustment if there is a regular error between the leading or trailing edges of the original and the copy image when the DP is used.

Method

1. Press the start key.
2. Select the item to be adjusted using the cursor up/down keys.

Display	Description	Setting range	Initial setting	Change in value per step
FRONT HEAD	Leading edge registration (first page)	-32 to 32	0	0.196 mm
FRONT TAIL	Trailing edge registration (first page)	-32 to 32	0	0.196 mm
BACK HEAD	Leading edge registration (second page)	-45 to 45	0	0.196 mm
BACK TAIL	Trailing edge registration (second page)	-45 to 45	0	0.196 mm
ROTATE	Leading edge registration (rotate copying)	-128 to 127	0	0.196 mm

Adjustment: Leading edge registration

1. Press the system menu/counter key.
2. Place an original on the DP and press the start key to make a test copy.
3. Press the system menu/counter key.
4. Change the setting value using the cursor left/right keys or numeric keys.
   For copy example 1, increase the value. For copy example 2, decrease the value.

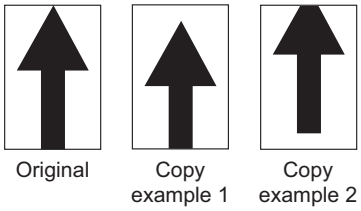

Figure 1-3-10

5. Press the start key. The value is set.

Caution

Check the copy image after the adjustment. If the image is still incorrect, perform the following adjustments in maintenance mode.

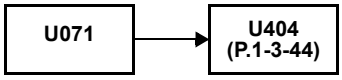

Maintenance item No.	Description
U071	**Adjustment: Trailing edge registration** 1. Press the system menu/counter key. 2. Place an original on the DP and press the start key to make a test copy. 3. Press the system menu/counter key. 4. Change the setting value using the cursor left/right keys or numeric keys. For copy example 1, increase the value. For copy example 2, decrease the value. 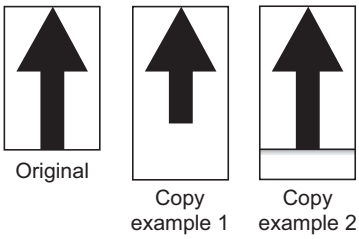 **Figure 1-3-11** 5. Press the start key. The value is set. **Caution** Check the copy image after the adjustment. If the image is still incorrect, perform the following adjustments in maintenance mode. **U071** → **U404 (P.1-3-44)** **Completion** Press the stop key. The screen for selecting a maintenance item No. is displayed.

Maintenance item No.	Description
U072	

Adjusting the DP center line

Description

Adjusts the scanning start position for the DP original.

Purpose

Make the adjustment if there is a regular error between the centers of the original and the copy image when the DP is used.

Adjustment

1. Press the start key.
2. Select the item to be adjusted using the cursor up/down keys.

Display	Description	Setting range	Initial setting	Change in value per step
FRONT	Center line (first page)	-39 to 39	0	0.085 mm
BACK	Center line (second page)	-39 to 39	0	0.085 mm
ROTATE	Center line (rotate copying)	-39 to 39	0	0.085 mm

3. Press the system menu/counter key.
4. Place an original on the DP and press the start key to make a test copy.
5. Press the system menu/counter key.
6. Change the setting value using the cursor left/right keys or numeric keys.
   For copy example 1, increase the value. For copy example 2, decrease the value.

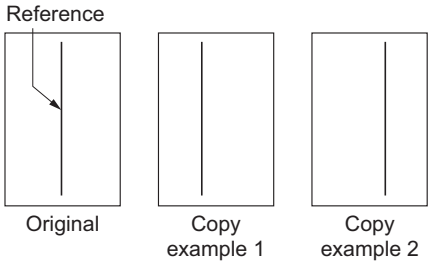

Figure 1-3-12

7. Press the start key. The value is set.

Caution

Check the copy image after the adjustment. If the image is still incorrect, perform the following adjustments in maintenance mode.

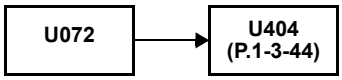

Completion

Press the stop key. The screen for selecting a maintenance item No. is displayed.

Maintenance item No.	Description
U073	

Checking scanner operation

Description

Simulates the scanner operation under arbitrary conditions.

Purpose

To check scanner operation.

Start

1. Press the start key.
2. Select the item to be operated using the cursor up/down keys.

Display	Description
SCANNER MOTOR	Scanner operation
HOME POSITION	Home position operation
DUST CHECK	Dust adhesion check operation with lamp on
DP READING	DP scanning position operation

Setting: SCANNER MOTOR

1. Select [SCANNER MOTOR].
2. Select the item to be set using the cursor up/down keys.
3. Change the setting using the cursor left/right keys.

Display	Operating conditions	Setting range
ZOOM	Magnification	25 to 400%
SIZE	Original size	See below.
LAMP	On and off of the exposure lamp	0 (off) or 1 (on)

Original sizes for each setting in SIZE

Setting	Paper size	Setting	Paper size
5000	A4	7800	Folio
6100	B5R	8400	8 1/2" x 14"
5000	A5R	6600	8 1/2" x 11"

4. Select [EXECUTE] using the cursor up/down keys.
5. Press the start key. Scanning starts under the selected conditions.
6. To stop operation, press the stop key.

Method: HOME POSITION

1. Select [HOME POSITION].
2. Press the start key.
   The mirror frame of the scanner moves to the home position.

Method: DUST CHECK

1. Select [DUST CHECK].
2. Press the start key. The exposure lamp lights.
3. To turn the exposure lamp off, press the stop key.

Method: DP READING

1. Select [DP READING].
2. Press the start key.
   The mirror frame of the scanner moves to the reading position.

Completion

Press the stop key when scanning stops. The screen for selecting a maintenance item No. is displayed.

Maintenance item No.	Description
U087	**Setting DP reading position modification operation** **Description** The presence or absence of dust is determined by comparing the scan data of the original trailing edge and that taken after the original is conveyed past the DP original scanning position. If dust is identified, the DP original scanning position is adjusted for the following originals. **Purpose** When using DP, to solve the problem when black lines occurs due to the dust with respect to original reading position. **Method** 1. Press the start key. 2. Select the item to be set using the cursor up/down keys. **Display** / **Description** CCD — Setting of standard data when dust is detected. BLACK LINE — Initialization of original reading position. **Setting: Standard data when dust is detected** 1. Select the item to be set using the cursor up/down keys. 2. Change the value using the cursor left/right keys or numeric keys. **Display** / **Description** / **Setting range** / **Initial setting** CCD R — Lowest density of the R regard as the dust — 0 to 255 — 125 CCD G — Lowest density of the G regard as the dust — 0 to 255 — 125 CCD B — Lowest density of the B regard as the dust — 0 to 255 — 120 3. Press the start key. The value is set. **Setting: Initialization of original reading position** 1. Select [CLEAR] using the cursor up/down keys. 2. Press the start key. The setting is cleared. **Completion** Press the stop key. The screen for selecting a maintenance item No. is displayed.

Maintenance item No.	Description
U089	**Outputting a MIP-PG pattern** **Description** Selects and outputs the MIP-PG pattern created in the machine. **Purpose** To check copier status other than scanner when adjusting image printing, using MIP-PG pattern output (without scanning). **Method** 1. Press the start key. 2. Select the MIP-PG pattern to be output using the cursor up/down keys.

Display	PG pattern to be output	Purpose
Gray Scale		To check the laser scanner unit engine output characteristics.
Mono-Level	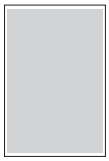	To check the drum quality.
256-Level		To check resolution reproducibility in printing.
1 dot-Level	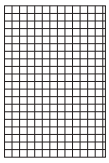	To check fine line reproducibility. To adjust the position of the laser scanner unit (lateral squareness)

Method: Gray Scale

1. Select [Gray Scale] using the cursor up/down keys and press the start key.
2. Select [HTFM1], [HTFM2], [Dither1] or [Dither2] using the cursor up/down keys and press the start key.
3. Select [ON] or [OFF] using the cursor up/down keys and press the start key.
4. Press the system menu/counter key.
5. Press the start key. A MIP-PG pattern is output.
6. To return to the screen for selecting an item, press the system menu/counter key.

Method: Mono-Level

1. Select [Mono-Level] using the cursor up/down keys and press the start key.
2. Change the value using the cursor left/right keys or numeric keys and press the start key.

Description	Setting range	Initial setting
Gray level	0 to 255	0

3. Select [HTFM1], [HTFM2], [Dither1] or [Dither2] using the cursor up/down keys and press the start key.
4. Select [ON] or [OFF] using the cursor up/down keys and press the start key.
5. Press the system menu/counter key.
6. Press the start key. A MIP-PG pattern is output.
7. To return to the screen for selecting an item, press the system menu/counter key.

<table>
<tr><th>Maintenance item No.</th><th>Description</th></tr>
<tr><td>U089</td><td>

Method: 256-Level

1. Select [256-Level] using the cursor up/down keys and press the start key.
2. Select [HTFM1], [HTFM2], [Dither1] or [Dither2] using the cursor up/down keys and press the start key.
3. Select [ON] or [OFF] using the cursor up/down keys and press the start key.
4. Press the system menu/counter key.
5. Press the start key. A MIP-PG pattern is output.
6. To return to the screen for selecting an item, press the system menu/counter key.

Method: 1 dot-Level

1. Select [1 dot-Level] using the cursor up/down keys and press the start key.
2. Change the value using the cursor left/right keys or numeric keys and press the start key.

<table>
<tr><th>Description</th><th>Setting range</th><th>Initial setting</th></tr>
<tr><td>Dot pattern</td><td>0 to 15</td><td>0</td></tr>
</table>

3. Press the system menu/counter key.
4. Press the start key. A MIP-PG pattern is output.
5. To return to the screen for selecting an item, press the system menu/counter key.

Completion

Press the stop key. The screen for selecting a maintenance item No. is displayed.

</td></tr>
</table>

<table>
<tr><th>Maintenance item No.</th><th>Description</th></tr>
<tr><td>U100</td><td>
Setting the main high voltage
Description
Controls the main charger high voltage to optimize the surface potential.
Purpose
To change the setting value to adjust the image if an image failure (background blur, etc.) occurs.
Setting
1. Press the start key.
2. Change the setting value using the cursor left/right keys or numeric keys.
<table>
<tr><th>Display</th><th>Description</th><th>Setting range</th><th>Initial setting</th></tr>
<tr><td>ADJUST</td><td>Main charger high voltage output</td><td>-30 to 30</td><td>0</td></tr>
</table>
3. Press the start key. The value is set.
4. Turn the main power switch off and on.
</td></tr>
<tr><td>U101</td><td>
Setting the voltage for the primary transfer
Description
Sets the control voltage for the primary transfer.
Purpose
To change the setting when any density problems, such as too dark or light, occur.
Setting
1. Press the start key.
2. Change the setting value using the cursor left/right keys or numeric keys.
<table>
<tr><th>Display</th><th>Description</th><th>Setting range</th><th>Initial setting</th></tr>
<tr><td>ADJUST</td><td>Primary transfer control voltage</td><td>-30 to 30</td><td>0</td></tr>
</table>
3. Press the start key. The value is set.
4. Turn the main power switch off and on.
</td></tr>
<tr><td>U111</td><td>
Checking/clearing the drum drive time
Description
Displays and clears the drum drive time for checking a figure, which is used as a reference when correcting the high voltage based on time.
Purpose
To check the drum status.
Also to clear the drum drive time during maintenance service (replacing the maintenance kit).
(See page 1-4-3, page 1-5-29 and page 1-5-30)
Method
1. Press the start key. The drum drive time is displayed.
<table>
<tr><th>Display</th><th>Description</th></tr>
<tr><td>TIME(min)</td><td>Drum drive time</td></tr>
</table>
Clearing
1. Select [CLEAR] using the cursor up/down keys.
2. Press the start key. The count is cleared.
Completion
Press the stop key. The screen for selecting a maintenance item No. is displayed.
</td></tr>
</table>

<table>
<tr><th>Maintenance item No.</th><th>Description</th></tr>
<tr><td>U113</td><td>
Performing drum refresh operation
Description
Sets the drum refresh operation.
Purpose
To operate when a faulty image (black line, etc.) occurs.
Method
1. Press the start key.
<table>
<tr><th>Display</th><th>Description</th><th>Setting range</th><th>Initial setting</th></tr>
<tr><td>DRUM REFRESH</td><td>Setting the drum refresh operation ON/OFF</td><td>1 (ON) / 0 (OFF)</td><td>0</td></tr>
<tr><td>ON TIME(sec)</td><td>Setting the drum refresh operation time</td><td>0 to 255 (s)</td><td>0</td></tr>
</table>
2. Select [DRUM REFRESH].
3. Select [ON] using the cursor left/right keys.
4. Press the start key. The setting is set.
5. Turn the main power switch off and on.

Setting: ON TIME(sec)
1. Select [ON TIME(sec)] using the cursor up/down keys.
2. Change the setting value using the cursor left/right keys.
3. Press the start key. The value is set.
4. Turn the main power switch off and on.
</td></tr>
<tr><td>U130</td><td>
Initial setting for the developing unit
Description
Replenishes toner to the developing unit to a certain level from the toner container that has been installed.
Purpose
To operate when installing the machine or replacing the developing unit.
Also to operate during maintenance service (replacing the maintenance kit).
(See page 1-4-3, page 1-5-29 and page 1-5-30)
Method
1. Press the start key.
2. Select [INST MODE] using the cursor up/down keys and press the start key.
<table>
<tr><th>Display</th><th>Description</th></tr>
<tr><td>TIME(SEC)</td><td>Execution time</td></tr>
<tr><td>INST MODE</td><td>Setting the toner installation ON/OFF</td></tr>
</table>
3. Select [ON] using the cursor left/right keys.
4. Press the start key.
5. Turn the main power switch off and on.
Toner installation is started.
Completion
Press the stop key after initial setting is complete. The screen for selecting a maintenance item No. is displayed.
</td></tr>
</table>

Maintenance item No.	Description
U144	**Setting toner loading operation** **Description** Sets toner loading operation after completion of copying. Toner is forcibly evacuated in case the average printing ratio for the number of printed pages assigned by [PAGE] is lower than the ratio defined by [RATIO]. **Purpose** To set whether or not toner is loaded on the drum after low density copying. Normally no change is necessary from the initial setting. **Setting** 1. Press the start key. 2. Select the item to be set using the cursor up/down keys. 3. Change the setting using the cursor left/right keys.

Display	Description	Setting range	Initial setting
T7 MODE	Toner loading operation	1 (ON) / 0 (OFF)	1
STEP1 PAGE	Number of pages set (step1)	0 to 50	3
STEP2 PAGE	Number of pages set (step2)	0 to 50	8
STEP3 PAGE	Number of pages set (step3)	0 to 50	20
STEP1 RATE	Printing ratio (step1)	0 to 100	1
STEP2 RATE	Printing ratio (step2)	0 to 100	2
STEP3 RATE	Printing ratio (step3)	0 to 100	3

4. Press the start key. The value is set.
5. Turn the main power switch off and on.

U157	**Checking the developing drive time** **Description** Displays the developing drive time for checking. **Purpose** To check the developing drive time after replacing the developing unit. **Method** 1. Press the start key. The developing drive time is displayed in minutes.

Display	Description
TIME(min)	Developing drive time

Completion
Press the stop key. The screen for selecting a maintenance item No. is displayed.

<table>
<tr><th>Maintenance item No.</th><th>Description</th></tr>
<tr><td>U161</td><td>
Setting the fuser control temperature
Description
Changes the fuser control temperature.
Purpose
Normally no change is necessary. However, can be used to prevent curling or creasing of paper, or solve a fuser problem on thick paper.
Method
1. Press the start key.
2. Select the item to be set using the cursor up/down keys.
3. Change the setting using the cursor left/right keys or numeric keys.
<table>
<tr><th>Display</th><th>Description</th><th>Setting range</th><th>Initial setting</th></tr>
<tr><td>1ST TEMP T1</td><td>Stabilized temperature during operation T1</td><td>-30 to 30</td><td>0</td></tr>
<tr><td>2ND TEMP T2</td><td>Stabilized temperature under suspension T2</td><td>-30 to 30</td><td>0</td></tr>
<tr><td>2ND TEMP T2-2</td><td>Stabilized temperature under suspension T2-2</td><td>-30 to 30</td><td>0</td></tr>
<tr><td>1ST FEED TEMP</td><td>Primary paper feed start temperature</td><td>-30 to 30</td><td>0</td></tr>
<tr><td>2ND FEED TEMP</td><td>Secondary paper feed start tempera</td><td>-30 to 30</td><td>0</td></tr>
<tr><td>PRINT TEMP T3</td><td>Temperature control during printing T3</td><td>-30 to 30</td><td>0</td></tr>
<tr><td>PRINT TEMP T4</td><td>Temperature control during printing T4</td><td>-30 to 30</td><td>0</td></tr>
</table>
4. Press the start key. The value is set.
5. Turn the main power switch off and on.
</td></tr>
<tr><td>U199</td><td>
Checking the fuser temperature
Description
Displays the fuser temperature, the ambient temperature.
Purpose
To check the fuser temperature, the ambient temperature.
Method
1. Press the start key. The fuser temperature and ambient temperature are displayed in centigrade (°C).
<table>
<tr><th>Display</th><th>Description</th></tr>
<tr><td>HEAT TEMP</td><td>Fuser temperature (°C)</td></tr>
<tr><td>SURROUND TEMP</td><td>Ambient temperature (°C)</td></tr>
</table>
Completion
Press the stop key. The screen for selecting a maintenance item No. is displayed.
</td></tr>
<tr><td>U200</td><td>
Turning all LEDs on
Description
Turns all the LEDs on the operation panel on.
Purpose
To check if all the LEDs on the operation panel light.
Method
1. Press the start key.
2. Select [EXECUTE] and press the start key.
All the LEDs on the operation panel light.
3. Press the stop key. The LEDs turns off.
Completion
Press the stop key. The screen for selecting a maintenance item No. is displayed.
</td></tr>
</table>

<table>
<tr><th>Maintenance item No.</th><th>Description</th></tr>
<tr><td>U203</td><td>

Checking DP operation

Description

Simulates the original conveying operation separately in the DP.

Purpose

To check the DP operation.

Method

1. Press the start key.
2. Place an original in the DP if running this simulation with paper.
3. Select the speed to be operated using the cursor up/down keys.

Display	Description
NORMAL SPEED	Normal reading (600 dpi)
HIGH SPEED	High-speed reading

4. Press the start key.
5. Select the item to be operated using the cursor up/down keys.

Display	Description
CCD ADP (NON P)	Without paper, single-sided original of CCD (continuous operation)
CCD ADP	With paper, single-sided original of CCD
CCD RADP (NON P)	Without paper, double-sided original of CCD (continuous operation)
CCD RADP	With paper, double-sided original of CCD

6. Press the start key. The operation starts.
7. To stop continuous operation, press the stop key.

Completion

Press the stop key. The screen for selecting a maintenance item No. is displayed.

</td></tr>
<tr><td>U207</td><td>

Checking the operation panel keys

Description

Checks operation of the operation panel keys.

Purpose

To check operation of all the keys and LEDs on the operation panel.

Method

1. Press the start key. and the screen for executing is displayed. [S01] is displayed
2. Starting with the system menu/counter key in the left most column, press the operation panel keys one by one.
   Each time a key is pressed, the count will increase and the corresponding LED (if any) will light up.
3. When all the keys on the operation panel have been pressed, [END] is displayed and all the LEDs light.

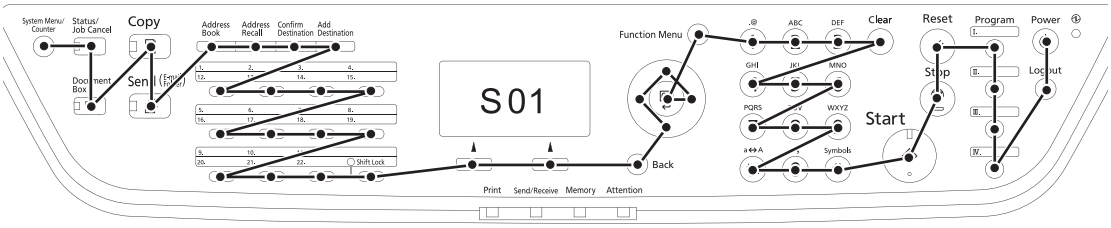

Figure 1-3-13

Completion

Press the stop key. The screen for selecting a maintenance item No. is displayed.

</td></tr>
</table>

<table>
<tr><th>Maintenance item No.</th><th>Description</th></tr>
<tr><td>U222</td><td>
Setting the IC card type
Description
Sets the IC card type.
This is an optional device which is currently supported only by Japanese specification machines, so no setting is necessary.
</td></tr>
<tr><td>U223</td><td>
Operation panel lock
Description
Sets the operation panel lock function to ON or OFF.
Purpose
To restrict operation in the system menu on the operation panel.
Setting
1. Press the start key.
2. Select the item using the cursor up/down keys.
<table>
<tr><th>Display</th><th>Description</th></tr>
<tr><td>UNLOCK</td><td>Release the lock of the operation from the system menu</td></tr>
<tr><td>PARTIAL LOCK</td><td>Partially lock the operation from the system menu</td></tr>
<tr><td>LOCK</td><td>Entirely lock the operation from the system menu</td></tr>
</table>
Initial setting: UNLOCK
3. Press the start key. The setting is set.
Completion
Press the stop key. The screen for selecting a maintenance item No. is displayed.
</td></tr>
<tr><td>U243</td><td>
Checking the operation of the DP motor solenoids and clutch
Description
Turns the motor, solenoids and clutch in the DP on.
Purpose
To check the operation of the DP motor, solenoids and clutch.
Method
1. Press the start key.
2. Select the item to be operated using the cursor up/down keys.
3. Press the start key. The operation starts.
<table>
<tr><th>Display</th><th>Motor, solenoids and clutch</th></tr>
<tr><td>DP FEED MOT</td><td>DP paper feed motor is turned on.</td></tr>
<tr><td>DP REV PRS SOL</td><td>DP switchback pressure solenoid is turned on.</td></tr>
<tr><td>DP REV BRCH SOL</td><td>DP switchback feedshift solenoid is turned on.</td></tr>
<tr><td>DP FEED CL</td><td>DP paper feed clutch is turned on.</td></tr>
</table>
4. To stop operation, press the stop key.
Completion
Press the stop key when operation stops. The screen for selecting a maintenance item No. is displayed.
</td></tr>
</table>

<table>
<tr><th>Maintenance item No.</th><th>Description</th></tr>
<tr><td>U244</td><td>
Checking the DP sensors
Description
Displays the status of the respective sensors in the DP.
Purpose
To check if respective sensors in the DP operate correctly.
Method
1. Press the start key.
2. Turn the respective sensors on and off manually to check the status.
When a sensor is detected to be in the ON position, the display for that sensor will be highlighted.
<table>
<tr><th>Display</th><th>Sensors</th></tr>
<tr><td>TMG SW</td><td>DP timing sensor</td></tr>
<tr><td>SET SW</td><td>DP original sensor</td></tr>
<tr><td>DP OP SW</td><td>DP open/close sensor</td></tr>
</table>
Completion
Press the stop key. The screen for selecting a maintenance item No. is displayed.
</td></tr>
<tr><td>U250</td><td>
Setting the maintenance cycle
Description
Displays and changes the maintenance cycle.
Purpose
To check and change the maintenance cycle.
Method
1. Press the start key. The currently set maintenance cycle is displayed.
Setting
1. Select [M.CNT A] using the cursor up/down keys.
2. Change the setting using the cursor left/right keys or numeric keys.
<table>
<tr><th>Description</th><th>Setting range</th><th>Initial setting</th></tr>
<tr><td>Maintenance cycle</td><td>0 to 9999999</td><td>100000</td></tr>
</table>
3. Press the start key. The value is set.
Clearing
1. Select [CLEAR] using the cursor up/down keys.
2. Press the start key. The count is cleared.
Completion
Press the stop key. The screen for selecting a maintenance item No. is displayed.
</td></tr>
<tr><td>U251</td><td>
Checking/clearing the maintenance count
Description
Displays, clears and changes the maintenance count.
Purpose
To check the maintenance count.
Also to clear the count during maintenance service (replacing the maintenance kit).
(See page 1-4-3, page 1-5-29 and page 1-5-30)

Method
1. Press the start key. The maintenance count is displayed.
Setting
1. Select [M.CNT A] using the cursor up/down keys.
2. Enter a count using the cursor left/right keys or numeric keys.
3. Press the start key. The count is set.
Clearing
1. Select [CLEAR] using the cursor up/down keys.
2. Press the start key. The count is cleared.
Completion
Press the stop key. The screen for selecting a maintenance item No. is displayed.
</td></tr>
</table>

Maintenance item No.	Description
U252	**Setting the destination** **Description** Switches the operations and screens of the machine according to the destination. **Purpose** To be executed after initializing the backup RAM, in order to return the setting to the value before replacement or initialization. **Setting** 1. Press the start key. 2. Select the destination using the cursor up/down keys. 3. Press the start key. The setting is set. 4. After turning the main power switch off, wait a while and turn it on. **Supplement** The specified initial settings are provided according to the destinations in the maintenance items below. To change the initial settings in those items, be sure to run maintenance item U021 after changing the destination. **Initial setting according to the destinations**
U253	**Switching between double and single counts** **Description** Switches the count system for the total counter and other counters. **Purpose** Used to select, according to the preference of the user (copy service provider), if folio size is to be counted as one sheet (single count) or two sheets (double count). **Setting** 1. Press the start key. 2. Select the count system using the cursor up/down keys. Initial setting: DBL COUNT(FOLIO) 3. Press the start key. The setting is set. **Completion** Press the stop key. The screen for selecting a maintenance item No. is displayed.

Display	Description
INCH	Inch (North America) specifications
EUROPE METRIC	Metric (Europe) specifications
ASIA PACIFIC	Metric (Asia Pacific) specifications
AUSTRALIA	Australia specifications
CHINA	China specifications

Maintenance item No.	Title	Japan	Inch	Europe Metric, Asia Pacific
253	Switching between double and single counts	Single	Double	Double

Display	Description
SGL COUNT(ALL)	Single count for all size paper
DBL COUNT(FOLIO)	Double count for Folio size or larger

<table>
<tr><th>Maintenance item No.</th><th>Description</th></tr>
<tr><td>U260</td><td>
Selecting the timing for copy counting
Description
Changes the copy count timing for the total counter and other counters.
Purpose
To be set according to user request.
Setting
1. Press the start key.
2. Select the copy count timing using the cursor up/down keys.
<table>
<tr><th>Display</th><th>Description</th></tr>
<tr><td>FEED</td><td>When secondary paper feed starts</td></tr>
<tr><td>EJECT</td><td>When the paper is ejected</td></tr>
</table>
Initial setting: EJECT
3. Press the start key. The setting is set.
Completion
Press the stop key. The screen for selecting a maintenance item No. is displayed.
</td></tr>
<tr><td>U265</td><td>
Setting OEM purchaser code
Description
Sets the OEM purchaser code.
Purpose
Sets the code when replacing the control PWB and the like.
Setting
1. Press the start key.
2. Change the preset value using the cursor left/right keys or numeric keys.
3. Press the start key. The setting is set.
Completion
Press the stop key. The screen for selecting a maintenance item No. is displayed.
</td></tr>
<tr><td>U278</td><td>
Setting the delivery date
Description
Enter delivery date in month, day, and year.
Purpose
Perform this to confirm the delivery date.
Method
1. Press the start key.
2. Select [TODAY] using the cursor up/down keys.
3. Press the start key. The delivery date is set.
Clearing
1. Select [CLEAR] using the cursor up/down keys.
2. Press the start key. The delivery date is cleared.
Completion
Press the stop key. The screen for selecting a maintenance item No. is displayed.
</td></tr>
</table>

<table>
<tr><th>Maintenance item No.</th><th>Description</th></tr>
<tr><td>U285</td><td>
Setting service status page
Description
Determines displaying the digital dot coverage report on reporting.
Purpose
According to user request, changes the setting.
Setting
1. Press the start key.
2. Select ON or OFF using the cursor up/down keys.
<table>
<tr><th>Display</th><th>Description</th></tr>
<tr><td>ON</td><td>Displays the digital dot coverage</td></tr>
<tr><td>OFF</td><td>Not to display the digital dot coverage</td></tr>
</table>
Initial setting: ON
3. Press the start key. The setting is set.
Completion
Press the stop key. The screen for selecting a maintenance item No. is displayed.
</td></tr>
<tr><td>U332</td><td>
Setting the size conversion factor
Sets the coefficient of nonstandard sizes in relation to the A4/Letter size. The coefficient set here is used to convert the black ratio in relation to the A4/Letter size and to display the result in user simulation.
Purpose
To set the coefficient for converting the black ratio for nonstandard sizes in relation to the A4/Letter size.
Setting
1. Press the start key.
2. Change the setting using the cursor left/right keys or numeric keys.
<table>
<tr><th>Display</th><th>Description</th><th>Setting range</th><th>Initial setting</th></tr>
<tr><td>Calc. Rate</td><td>Size parameter</td><td>0.1 to 3.0</td><td>1.0</td></tr>
</table>
3. Press the start key. The value is set.
Completion
Press the stop key. The screen for selecting a maintenance item No. is displayed.
</td></tr>
<tr><td>U342</td><td>
Setting the ejection restriction
Description
Sets or cancels the restriction on the number of sheets to be ejected continuously.
Purpose
According to user request, sets or cancels restriction on the number of sheets.
Setting
1. Press the start key.
2. Select [ON] or [OFF] using the cursor up/down keys.
<table>
<tr><th>Display</th><th>Description</th></tr>
<tr><td>ON</td><td>Sets restriction on the number of sheets</td></tr>
<tr><td>OFF</td><td>Cancels restriction on the number of sheets</td></tr>
</table>
Initial setting: ON
3. Press the start key. The setting is set.
Completion
Press the stop key. The screen for selecting a maintenance item No. is displayed.
</td></tr>
</table>

<table>
<tr><th>Maintenance item No.</th><th>Description</th></tr>
<tr><td>U343</td><td>
Switching between duplex/simplex copy mode
Description
Switches the initial setting between duplex and simplex copy.
Purpose
To be set according to frequency of use: set to the more frequently used mode.
Setting
1. Press the start key.
2. Select [ON] or [OFF] using the cursor up/down keys.
<table>
<tr><th>Display</th><th>Description</th></tr>
<tr><td>ON</td><td>Duplex copy</td></tr>
<tr><td>OFF</td><td>Simplex copy</td></tr>
</table>
Initial setting: OFF
3. Press the start key. The setting is set.
Completion
Press the stop key. The screen for selecting a maintenance item No. is displayed.
</td></tr>
<tr><td>U345</td><td>
Setting the value for maintenance due indication
Description
Sets when to display a message notifying that the time for maintenance is about to be reached, by setting the number of copies that can be made before the current maintenance cycle ends.
When the difference between the number of copies of the maintenance cycle and that of the maintenance count reaches the set value, the message is displayed.
Purpose
To change the time for maintenance due indication.
Setting
1. Press the start key.
2. Select [COUNT] using the cursor up/down keys.
3. Change the setting using the cursor left/right keys.
<table>
<tr><th>Display</th><th>Description</th><th>Setting range</th></tr>
<tr><td>COUNT</td><td>Time for maintenance due indication
(Remaining number of copies that can be made before the current maintenance cycle ends)</td><td>0 to 9999</td></tr>
</table>
Initial setting: 0
4. Press the start key. The value is set.
Completion
Press the stop key. The screen for selecting a maintenance item No. is displayed.
</td></tr>
</table>

Maintenance item No.	Description
U402	**Adjusting margins of image printing** **Description** Adjusts margins for image printing. **Purpose** Make the adjustment if margins are incorrect. **Adjustment** 1. Press the start key. 2. Select the item to be adjusted using the cursor up/down keys.

Display	Description	Setting range	Initial setting	Change in value per step
LEAD	Printer leading edge margin	0 to 100	30	0.1 mm
A Margin	Printer left margin	0 to 100	25	0.1 mm
C Margin	Printer right margin	0 to 100	25	0.1 mm
TRAIL	Printer trailing edge margin	0 to 100	50	0.1 mm
TRAIL(DUPLEX)	Printer trailing edge margin (second page)	0 to 100	50	0.1 mm

3. Press the system menu/counter key.
4. Press the start key to output a test pattern.
5. Press the system menu/counter key.
6. Change the setting value using the cursor left/right keys or numeric keys.
   Increasing the value makes the margin wider, and decreasing it makes the margin narrower.

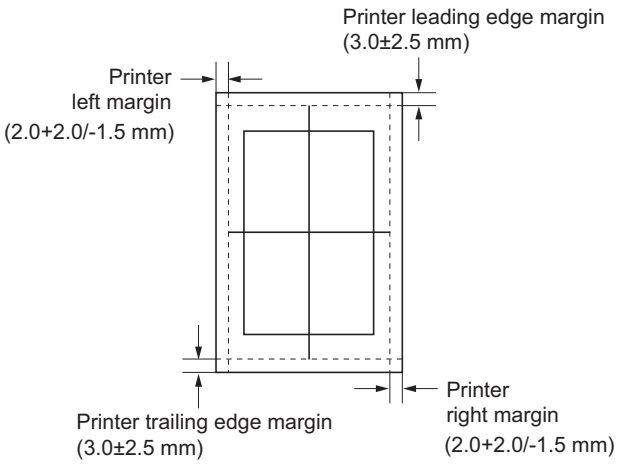

Figure 1-3-14

7. Press the start key. The value is set.

Caution
Check the copy image after the adjustment. If the image is still incorrect, perform the following adjustments in maintenance mode.

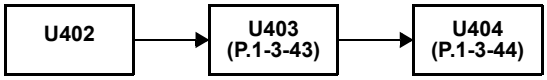

Completion
Press the stop key. The screen for selecting a maintenance item No. is displayed.

Maintenance item No.	Description
U403	**Adjusting margins for scanning an original on the platen**

Description
Adjusts margins for scanning the original on the platen.
Purpose
Make the adjustment if margins are incorrect.
Adjustment

1. Press the start key.
2. Select the item to be adjusted using the cursor up/down keys.

Display	Description	Setting range	Initial setting	Change in value per step
A MARGIN	Scanner left margin	0 to 10.0	2.0	0.5 mm
B MARGIN	Scanner leading edge margin	0 to 10.0	2.0	0.5 mm
C MARGIN	Scanner right margin	0 to 10.0	2.0	0.5 mm
D MARGIN	Scanner trailing edge margin	0 to 10.0	5.0	0.5 mm

3. Press the system menu/counter key.
4. Place an original and press the start key to make a test copy.
5. Press the system menu/counter key.
6. Change the setting value using the cursor left/right keys.
   Increasing the value makes the margin wider, and decreasing it makes the margin narrower.

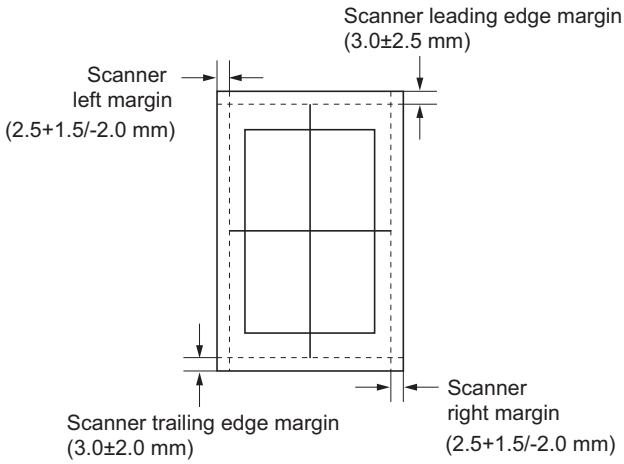

Figure 1-3-15

7. Press the start key. The value is set.

Caution
Check the copy image after the adjustment. If the image is still incorrect, perform the following adjustments in maintenance mode.

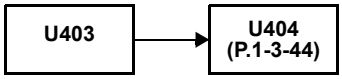

Completion
Press the stop key. The screen for selecting a maintenance item No. is displayed.

Maintenance item No.	Description
U404	**Adjusting margins for scanning an original from the DP**

Description
Adjusts margins for scanning the original from the DP.
Purpose
Make the adjustment if margins are incorrect when the optional DP is used.
Caution
Before making this adjustment, ensure that the following adjustments have been made in maintenance mode.

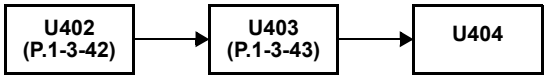

Adjustment
1. Press the start key.
2. Select the item to be adjusted using the cursor up/down keys.

Display	Description	Setting range	Initial setting	Change in value per step
A MARGIN	Left margin	0 to 10.0	3.0	0.5 mm
B MARGIN	Leading edge margin	0 to 10.0	2.5	0.5 mm
C MARGIN	Right margin	0 to 10.0	3.0	0.5 mm
D MARGIN	Trailing edge margin	0 to 10.0	4.0	0.5 mm

3. Press the system menu/counter key.
4. Place an original on the DP and press the start key to make a test copy.
5. Press the system menu/counter key.
6. Change the setting value using the cursor left/right keys.
   Increasing the value makes the margin wider, and decreasing it makes the margin narrower.

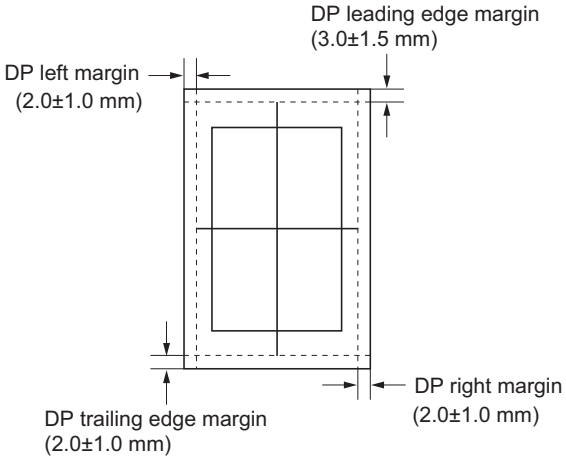

Figure 1-3-16

7. Press the start key. The value is set.

Completion
Press the stop key. The screen for selecting a maintenance item No. is displayed.

Maintenance item No.	Description
U407	**Adjusting the leading edge registration for memory image printing** **Description** Adjusts the leading edge registration during memory copying. **Purpose** Make the following adjustment if there is a regular error between the leading edge of the copy image on the front face and that on the reverse face during duplex switchback copying. **Caution** Before making this adjustment, ensure that the following adjustments have been made in maintenance mode. U034 (P.1-3-14) → U402 (P.1-3-42) → U066 (P.1-3-20) → U403 (P.1-3-43) → U071 (P.1-3-24) → U404 (P.1-3-44) → U407 **Adjustment** 1. Press the start key.

Description	Setting range	Initial setting	Change in value per step
Leading edge registration for memory image printing	-47 to 47	0	0.1 mm

2. Press the system menu/counter key.
3. Place an original and press the start key to make a test copy.
4. Press the system menu/counter key.
5. Change the setting value using the cursor left/right keys.
   For copy example 1, decrease the value.
   For copy example 2, increase the value.

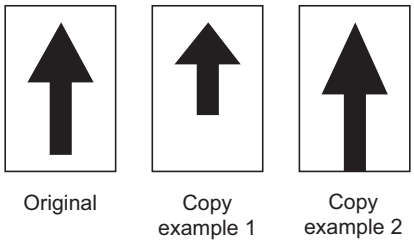

Figure 1-3-17

6. Press the start key. The value is set.

Completion

Press the stop/clear key. The screen for selecting a maintenance item No. is displayed.

Maintenance item No.	Description
U411	**Adjusting the scanner automatically** **Description** Uses the adjustment original suppled with DP and automatically adjusts the following items in the scanner and the DP scanning sections. **Purpose** To perform automatic adjustment of various items in the scanner and the DP scanning sections. **Method** 1. Press the start key. **Method: TABLE** 1. Enter the target values which are shown on the specified original (P/N: 302FZ56990) executing maintenance item U425. 2. Set a specified original (P/N: 302FZ56990) on the platen. 3. Enter maintenance item U411. 4. Select [ADJUST TABLE] using the cursor up/down keys. 5. Press the start key. Auto adjustment starts. When automatic adjustment has normally completed, [OK] is displayed. If a problem occurs during auto adjustment, [NG XX] (XX is replaced by an error code) is displayed and operation stops. Should this happen, determine the details of the problem and either repeat the procedure from the beginning, or adjust the remaining items manually by running the corresponding maintenance items. 6. To return to the screen for selecting an item, press the stop key. **Method: DP** 1. Select [ADJUST DP] using the cursor up/down keys. 2. Set a specified original (P/N: 303LJ57010) in the DP. 3. Press the start key. Auto adjustment starts. When automatic adjustment has normally completed, [OK] is displayed. If a problem occurs during auto adjustment, [NG XX] (XX is replaced by an error code) is displayed and operation stops. Should this happen, determine the details of the problem and either repeat the procedure from the beginning, or adjust the remaining items manually by running the corresponding maintenance items. 4. To return to the screen for selecting an item, press the stop key. **Completion** Press the stop key. The screen for selecting a maintenance item is displayed.

Display	Description	Original to be used for adjustment (P/N)
ADJUST TABLE	Automatic adjustment in the scanner section: Original size magnification, leading edge timing, center line, input gamma, input gamma in monochrome mode and matrix	302FZ56990
ADJUST DP	Automatic adjustment in the DP scanning section: Original size magnification, leading edge timing, center line	303LJ57010 (Adjustment original suppled with DP)

Maintenance item No.	Description
U425	**Setting the target** **Description** Enters the lab values that is indicated on the back of the chart (P/N: 302FZ56990) used for adjustment. **Purpose** Performs data input in order to correct for differences in originals during automatic adjustment. **Method** 1. Press the start key. 2. Select the item to be set using the cursor up/down keys. 3. Select the item to be set using the cursor up/down keys. 4. Enters the value that is indicated on the back of the chart using the cursor left/right keys or numeric keys. 5. Press the start key. The value is set. 6. To return to the screen for selecting an item, press the stop key. **Setting: [ADJUST ORIGINAL]** 1. Measure the distance from the left edge to the black belt (a) of the original at A, B and C. Measurement procedure 1) Measure the distance from the edge to the black belt (a) of the original at A (30 mm from the leading edge), B (154.5 mm from the leading edge) and C (267 mm from the leading edge), respectively. 2) Apply the following formula for the values obtained: ((A + C) / 2 + B) / 2 2. Enter the values solved using the cursor left/right keys or numeric keys in [MAIN]. 3. Press the start key. The value is set. 4. Measure the distance from the leading edge to the black belt (c) of the original at D, E and F. Measurement procedure 1) Measure the distance from the edge to the black belt (c) of the original at D (50 mm from the left edge), E (105 mm from the left edge) and F (160 mm from the left edge), respectively. 2) Apply the following formula for the values obtained: ((D + F) / 2 + E) / 2 5. Enter the values solved using the cursor left/right keys or numeric keys in [SUB LEAD]. 6. Press the start key. The value is set. 7. Measure the length (G) from the edge of the black belt (b) to edge of the black belt (c) of the original. 8. Enter the measured value using the cursor left/right keys or numeric keys in [SUB TAIL]. 9. Press the start key. The value is set. 10. To return to the screen for selecting an item, press the stop key.

Display	Description
N875	Setting the N875 patch for the original for adjustment
N475	Setting the N475 patch for the original for adjustment
N125	Setting the N125 patch for the original for adjustment
CYAN	Setting the cyan patch for the original for adjustment
MAGENTA	Setting the magenta patch for the original for adjustment
YELLOW	Setting the yellow patch for the original for adjustment
RED	Setting the red patch for the original for adjustment
GREEN	Setting the green patch for the original for adjustment
BLUE	Setting the blue patch for the original for adjustment
ADJUST ORIGINAL	Setting the main and auxiliary scanning directions

Display	Description	Setting range
L	Setting the L value	0.0 to 100.0
a	Setting the a value	-200.0 to 200.0
b	Setting the b value	-200.0 to 200.0

Maintenance item No.	Description
U425	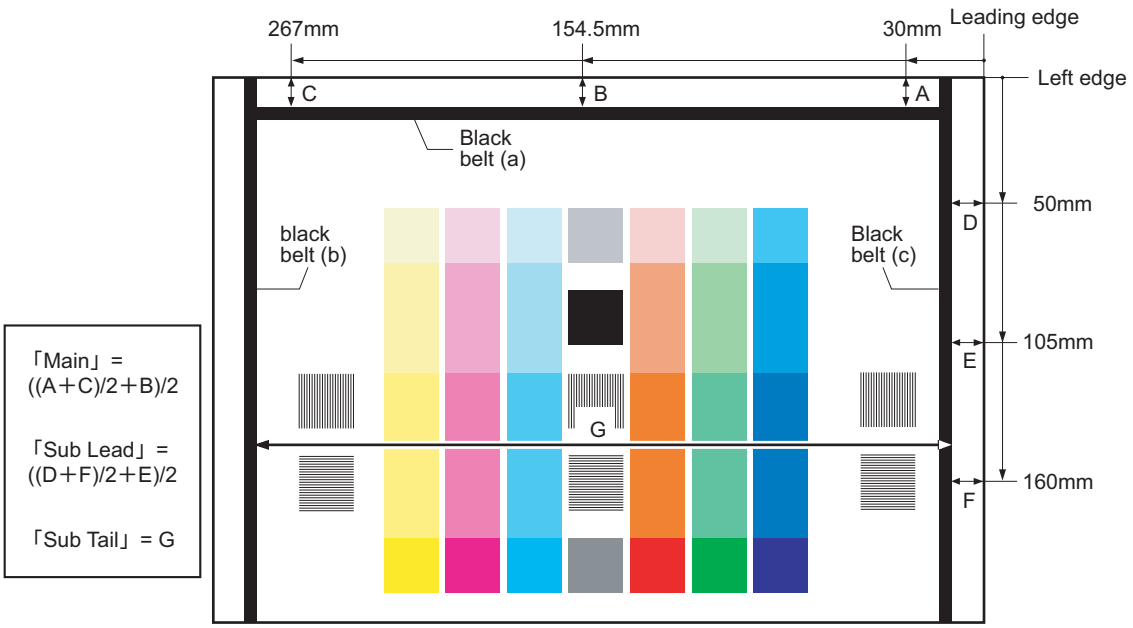 Original for adjustment (P/N: 302FZ56990) **Figure 1-3-18** **Completion** Press the stop key. The screen for selecting a maintenance item No. is displayed.
U901	**Checking copy counts by paper feed locations** **Description** Displays or clears copy counts by paper feed locations. **Purpose** To check the time to replace consumable parts. **Method** 1. Press the start key. The counts by paper feed locations are displayed. When an optional paper feed device is not installed, the corresponding count is not displayed. **Completion** Press the stop key. The screen for selecting a maintenance item No. is displayed.

Display	Paper feed locations
MP TRAY	MP tray
CASSETTE 1	Cassette 1
CASSETTE 2	Optional cassette 2
CASSETTE 3	Optional cassette 3
DUPLEX	Duplex section

<table>
<tr><th>Maintenance item No.</th><th>Description</th></tr>
<tr><td>U903</td><td>
Checking/clearing the paper jam counts
Description
Displays or clears the jam counts by jam locations.
Purpose
To check the paper jam status. Also to clear the jam counts after replacing consumable parts.
Method
1. Press the start key.
2. Select the item using the cursor up/down keys.
<table>
<tr><th>Display</th><th>Description</th></tr>
<tr><td>COUNT</td><td>Displays/clears the jam counts</td></tr>
<tr><td>TOTAL COUNT</td><td>Displays the total jam counts</td></tr>
</table>
Method: Displays/clears the jam counts
1. Select [COUNT] and press the start key. The count for jam detection by type is displayed.
2. Change the screen using the cursor up/down keys.
3. To clear the counts for all, select [ALL CLEAR].
4. Press the start key. The count is cleared.
The individual counter cannot be cleared.
5. To return to the screen for selecting an item, press the stop key.
Method: Displays the total jam counts
1. Select [TOTAL COUNT] and press the start key. The total number of jam counts by type is displayed.
2. Change the screen using the cursor up/down keys.
The total number of jam count cannot be cleared.
3. To return to the screen for selecting an item, press the stop key.
Completion
Press the stop key. The screen for selecting a maintenance item No. is displayed.
</td></tr>
<tr><td>U904</td><td>
Checking/clearing the service call counts
Description
Displays or clears the service call code counts by types.
Purpose
To check the service call code status by types. Also to clear the service call code counts after replacing consumable parts.
Method
1. Press the start key.
2. Select the item. The screen for executing is displayed.
<table>
<tr><th>Display</th><th>Description</th></tr>
<tr><td>COUNT</td><td>Displays/clears the service call counts</td></tr>
<tr><td>TOTAL COUNT</td><td>Displays the total service call counts</td></tr>
</table>
Method: Displays/clears the service call counts
1. Select [COUNT] and press the start key. The count for service call detection by type is displayed.
2. Change the screen using the cursor up/down keys.
3. To clear the counts for all, select [ALL CLEAR].
4. Press the start key. The count is cleared.
The individual counter cannot be cleared.
5. To return to the screen for selecting an item, press the stop key.
Method: Displays the total service call counts
1. Select [TOTAL COUNT] and press the start key. The total number of service call counts by type is displayed.
2. Change the screen using the cursor up/down keys.
The total number of service call count cannot be cleared.
3. To return to the screen for selecting an item, press the stop key.
Completion
Press the stop key. The screen for selecting a maintenance item No. is displayed.
</td></tr>
</table>

<table>
<tr><th>Maintenance item No.</th><th>Description</th></tr>
<tr><td>U905</td><td>
Checking/clearing counts by optional devices
Description
Displays or clears the counts of DP.
Purpose
To check the use of DP. Also to clear the counts after replacing consumable parts.
Method
1. Press the start key.
<table>
<tr><th>Display</th><th>Description</th></tr>
<tr><td>ADP</td><td>No. of single-sided originals that has passed through the DP</td></tr>
<tr><td>RADP</td><td>No. of double-sided originals that has passed through the DP</td></tr>
</table>
Clearing
1. Select the item to be cleared using the cursor up/down keys.
To clear the counts for all, select [ALL CLEAR].
2. Press the start key. The count is cleared.
Completion
Press the stop key. The screen for selecting a maintenance item No. is displayed.
</td></tr>
<tr><td>U908</td><td>
Checking the total counter value
Description
Displays the total counter value.
Purpose
To check the total counter value.
Method
1. Press the start key. The screen for total count value is displayed.
Completion
Press the stop key. The screen for selecting a maintenance item No. is displayed.
</td></tr>
<tr><td>U910</td><td>
Clearing the black ratio data
Description
Clears the accumulated black ratio data for A4 sheet.
Purpose
To clear data as required at times such as during maintenance service.
Method
1. Press the start key.
2. Select [ALL CLEAR] using the cursor up/down keys.
3. Press the start key. The accumulated black ratio data is cleared.
Completion
Press the stop key. The screen for selecting a maintenance item No. is displayed.
</td></tr>
<tr><td>U911</td><td>
Checking/clearing copy counts by paper sizes
Description
Displays and clears the paper feed counts by paper sizes.
Purpose
To check or clear the counts after replacing consumable parts.
Method
1. Press the start key. The screen for the paper feed counts by paper size is displayed.
Clearing
1. Press the start key.
2. Select the paper size using the cursor up/down keys.
To clear all counts, select [ALL CLEAR].
3. Press the start key. The count is cleared.
Completion
Press the stop/clear key. The screen for selecting a maintenance item No. is displayed.
</td></tr>
</table>

Maintenance item No.	Description
U917	**Setting backup data reading/writing** **Description** Retrieves the backup data to a USB memory from the machine; or writes the data from the USB memory to the machine. **Purpose** To store and write data when replacing the control PWB. **Method** 1. Press the power key on the operation panel, and after verifying the power indicator has gone off, switch off the main power switch. 2. Insert USB memory in USB memory slot. 3. Turn the main power switch on. Wait for 10 seconds to allow the machine to recognize the USB memory. 4. Enter the maintenance item. 5. Press the start key. 6. Select [Export] or [Import] using the cursor up/down keys and press the start key.

Display	Description
IMPORT	Writing data from the USB memory to the machine
EXPORT	Retrieving from the machine to a USB memory

7. Select the item using the cursor up/down keys.

Display	Description	Description
ADDRESS BOOK	Address book	-
JOB ACCNT.	Job accounting	-
ONE TOUCH	Information on one-touch	Address book
USER	User managements	Job accounting
PROGRAM	Program information	Job accountings and user managements
DOCUMENT BOX	Document box information	Job accountings and user managements

*: Since data are dependent with each other, data other than those assigned are also retrieved or written in.

8. Select [ON] using the cursor left/right keys.
9. Press the start key. Starts reading or writing.
The progress of selected item is displayed in %.
When an error occurs, the operation is canceled and an error code is displayed.
10. When normally completed, [FIN] is displayed.
11. Turn the main power switch off and on after completing writing when selecting [IMPORT].

Supplement
The following restrictions apply to the data which were imported from 4in1 models (with FAX) to 3in1 models (without FAX).
Personal address book: FAX-related data are not imported.
Group address book: Group addresses including FAX addresses are not imported.
Job accounting data: Initial values are added for FAX-related data.
One-touch data: Groups assigned with FAX addresses or those including FAX are not imported.
User management data: Initial values are added for out-going FAXes of authentication.
Program data: Not imported. (The same applies when data are imported from 3in1 to 4in1 models.)

Completion
Press the stop key. The screen for selecting a maintenance item No. is displayed.

<table>
<tr><th>Maintenance item No.</th><th>Description</th></tr>
<tr><td>U920</td><td>
Checking the copy counts
Description
Checks the copy counts.
Purpose
To check the copy counts.
Method
Press the start key. The current counts of copy counter and printer counter are displayed.
Completion
Press the stop key. The screen for selecting a maintenance item No. is displayed.
</td></tr>
<tr><td>U927</td><td>
Clearing the all copy counts and machine life counts (one time only)
Description
Resets all of the counts back to 0.
Purpose
To start the counters with value 0 when installing the machine.
Supplement
The total account counter and the machine life counter can be cleared only once if all count values are 1000 or less.
Method
1. Press the start key.
2. Select [EXECUTE].
3. Press the start key. All copy counts and machine life counts are cleared.
Completion
Press the stop key. The screen for selecting a maintenance item No. is displayed.
</td></tr>
<tr><td>U928</td><td>
Checking machine life counts
Description
Displays the machine life counts.
Purpose
To check the machine life counts.
Method
1. Press the start key. The current machine life counts is displayed.
Completion
Press the stop key. The screen for selecting a maintenance item No. is displayed.
</td></tr>
<tr><td>U942</td><td>
Setting of deflection for feeding from DP
Description
Adjusts the deflection generated when the DP is used.
Purpose
Use this mode if an original non-feed jam, oblique feed or wrinkling of original occurs when the DP is used.
Setting
1. Press the start key.
2. Select the item to be adjusted using the cursor up/down keys.
<table>
<tr><th>Display</th><th>Description</th><th>Setting range</th><th>Initial setting</th><th>Change in value per step</th></tr>
<tr><td>REGIST TOP</td><td>Deflection of single-sided original</td><td>-31 to 31</td><td>0</td><td>0.098 mm</td></tr>
<tr><td>REGIST BACK</td><td>Deflection of double-sided original</td><td>-31 to 31</td><td>0</td><td>0.098 mm</td></tr>
</table>
3. Press the system menu/counter key.
4. Place an original on the DP and press the start key to make a test copy.
5. Press the system menu/counter key.
6. Change the setting value using the cursor left/right keys or numeric keys.
The greater the value, the larger the deflection; the smaller the value, the smaller the deflection.
If an original non-feed jam or oblique feed occurs, increase the setting value. If wrinkling of original occurs, decrease the value.
7. Press the start key. The setting is set.
Completion
Press the stop key. The screen for selecting a maintenance item No. is displayed.
</td></tr>
</table>

<table>
<tr><th>Maintenance item No.</th><th>Description</th></tr>
<tr><td>U969</td><td>
Checking of toner area code
Description
Displays the toner area code.
Purpose
To check the toner area code.
Method
1. Press the start key. The toner area code is displayed.
Completion
Press the stop key. The screen for selecting a maintenance item No. is displayed.
</td></tr>
<tr><td>U977</td><td>
Data capture mode
Description
Store the print data sent to the machine into USB memory.
Purpose
In case to occur the error at printing, check the print data sent to the machine.
Method
1. Insert USB memory in USB memory slot.
2. Turn the main power switch on.
3. Enter the maintenance item.
4. Press the start key.
5. Select [EXECUTE].
6. Press the start key.
7. Send the print data to the machine.
Once the print data is stored into USB memory, OK will be displayed.
Completion
Press the stop key. The screen for selecting a maintenance item No. is displayed.
</td></tr>
<tr><td>U991</td><td>
Checking the scanner count
Description
Displays the scanner operation count.
Purpose
To check the status of use of the scanner.
Method
1. Press the start key.
<table>
<tr><th>Display</th><th>Description</th></tr>
<tr><td>Copy Scn</td><td>Scanner operation count for copying</td></tr>
<tr><td>Other Scn</td><td>Scanner operation count except for copying</td></tr>
</table>
Completion
Press the stop key. The screen for selecting a maintenance No. item is displayed.
</td></tr>
</table>

Maintenance item No.	Description
U993	**Outputting a VTC-PG pattern** **Description** Selects and outputs a VTC-PG pattern created in the machine. **Purpose** When performing respective image printing adjustments, used to check the machine status apart from that of the scanner with a non-scanned output VTC-PG pattern. **Method** 1. Press the start key. 2. Select the VTC-PG pattern to be output using the cursor up/down keys. 3. Press the system menu/counter key. 4. Press the start key. A VTC-PG pattern is output. 5. To return to the screen for selecting an item, press the system menu/counter key. **Completion** Press the stop key. The screen for selecting a maintenance item No. is displayed.

Display	PG pattern to be output	Purpose
PG1	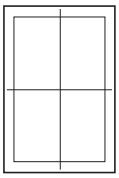	Leading edge registration adjustment Center line adjustment Margin adjustment
PG2	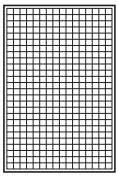	Lateral squareness adjustment Magnification adjustment

1-3-2 Management mode

In addition to a maintenance function for service, the machine is equipped with a management function which can be operated by users (mainly by the administrator). In this management mode, settings such as default settings can be changed.

(1) Using the management mode

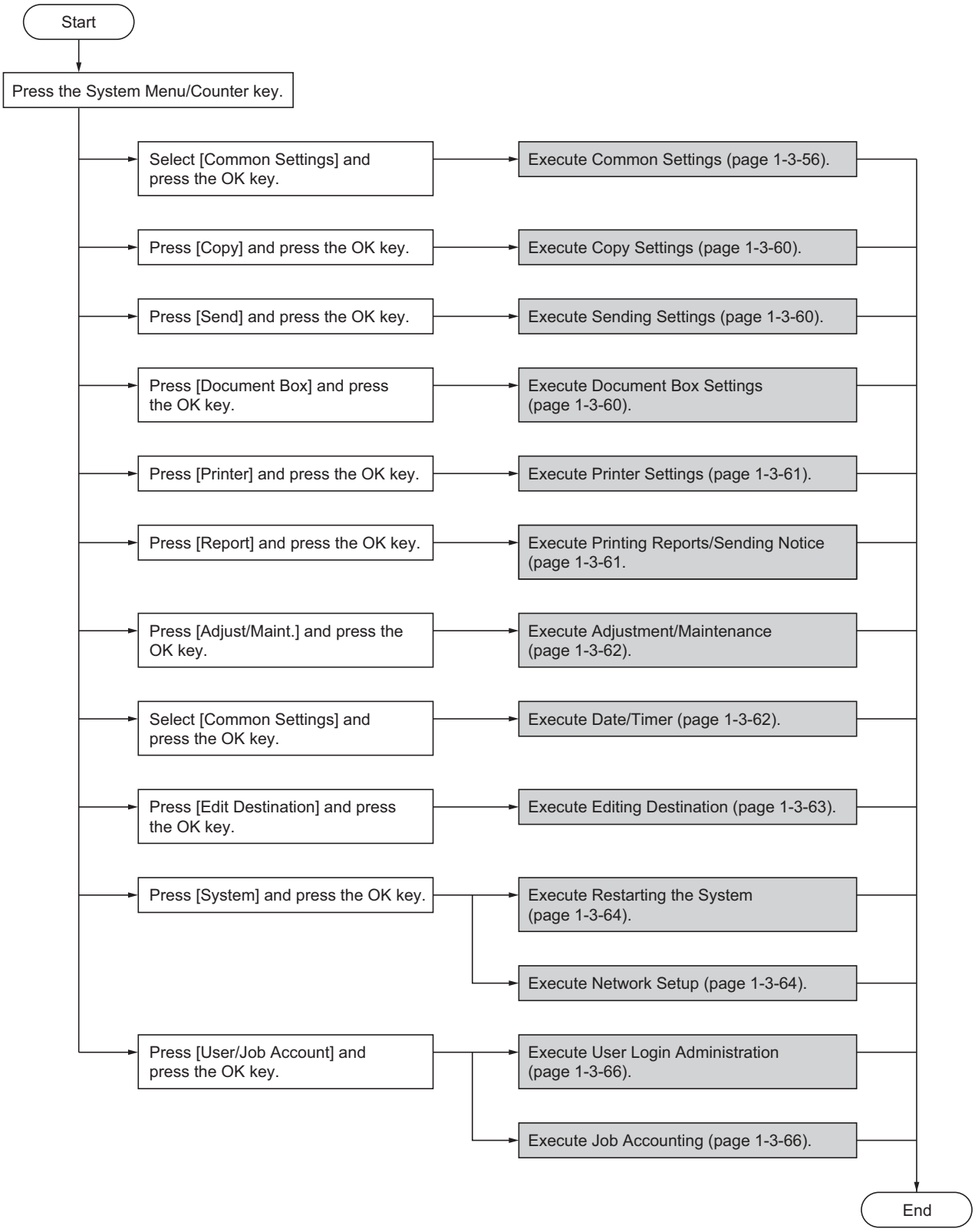

(2) Common Settings

Switching the Language for Display [Language]

1. Select [Language] using the cursor up/down keys.
2. Press the OK key.
3. Select the language you want to use.
4. Press the OK key.

Default Screen

1. Select [Default Screen] using the cursor up/down keys.
2. Press the OK key.
3. Select the screen to be displayed as the default screen.
4. Press the OK key.

Sound

1. Select [Sound] using the cursor up/down keys.
2. Press the OK key.
3. Select [Buzzer] using the cursor up/down keys.
4. Press the OK key.
5. Select [Key Confirmation], [Job Finish], [Ready] or [Warning] using the cursor up/down keys.
6. Select [On] or [Off]
7. Press the OK key.

Display Bright.

1. Select [Display Bright.] using the cursor up/down keys.
2. Press the OK key.
3. Select the display brightness.
   [Darker -3] to [Lighter +3]
4. Press the OK key.

Custom Original Size Setup

1. Select [Orig./Paper Set.] using the cursor up/down keys.
2. Press the OK key.
3. Select [Custom Orig.Size] using the cursor up/down keys.
4. Press the OK key.
5. Enter the paper length (Y) using the numeric keys.
6. Press the OK key.
7. Enter the paper width (X) using the numeric keys.
8. Press the OK key.

Default Original Size Setup

1. Select [Orig./Paper Set.] using the cursor up/down keys.
2. Press the OK key.
3. Select [Def. Orig. Size] using the cursor up/down keys.
4. Press the OK key.
5. Select the paper size to be used as the default value.
6. Press the OK key.

Adding a Custom Size and Media Type for Paper to Print

1. Select [Orig./Paper Set.] using the cursor up/down keys.
2. Press the OK key.
3. Select [Custom PaperSize] using the cursor up/down keys.
4. Press the OK key.
5. Select the paper source and press the OK key.
6. Enter the paper length (Y) using the numeric keys.
7. Press the OK key.
8. Enter the paper width (X) using the numeric keys.
9. Press the OK key.
10. Select the media type for which you want to set the custom size.
11. Press the OK key.

Paper Size and Media Type Setup for Cassettes

1. Select [Orig./Paper Set.] using the cursor up/down keys.
2. Press the OK key.
3. Select [Cassette 1 (to 3) Set.] using the cursor up/down keys.
4. Press the OK key.
5. Select [Cassette 1 (to 3) Size] using the cursor up/down keys.
6. Select the paper size.
7. Press the OK key.
8. Select [Cassette 1 (to 3) Type] using the cursor up/down keys.
9. Select the paper type.
10. Press the OK key.

Paper Size and Media Type Setup for Multi Purpose Tray

1. Select [Orig./Paper Set.] using the cursor up/down keys.
2. Press the OK key.
3. Select [MP Tray Set.] using the cursor up/down keys.
4. Press the OK key.
5. Select [MP Tray Size] using the cursor up/down keys.
6. Select the paper size.
   If you select [Others], you can select from additional paper sizes.
   If you select [Size Entry], you can register a custom size.
7. Press the OK key.
8. Select [MP Tray Type] and press the OK key.
9. Select the paper type.
10. Press the OK key.

Paper Weight

1. Select [Orig./Paper Set.] using the cursor up/down keys.
2. Press the OK key.
3. Select [MP Tray Set.] using the cursor up/down keys.
4. Press the OK key.
5. Select the paper type and press the OK key.
6. Select [Paper Weight] and press the OK key.
7. Select the weight of paper.
8. Press the OK key.
9. Select [Print Density] and press the OK key.
10. Select the print density.
11. Press the OK key.

Default Paper Source

1. Select [Orig./Paper Set.] using the cursor up/down keys.
2. Press the OK key.
3. Select [Def. PaperSource] using the cursor up/down keys.
4. Press the OK key.
5. Select the paper source to be used preferentially.
6. Press the OK key.

Media for Auto Selection

1. Select [Orig./Paper Set.] using the cursor up/down keys.
2. Press the OK key.
3. Select [Media for Auto] using the cursor up/down keys.
4. Press the OK key.
5. Select [All Media Type] or the paper type to be used for paper selection.
6. Press the OK key.

Special Paper Action

1. Select [Orig./Paper Set.] using the cursor up/down keys.
2. Press the OK key.
3. Select [SpcialPaper Act.] using the cursor up/down keys.
4. Press the OK key.
5. Select [Adj. PrintDirect] or [Speed Priority].
6. Press the OK key.

Preset Limit

1. Select [Preset Limit] using the cursor up/down keys.
2. Press the OK key.
3. Enter the number of copies.
4. Press the OK key.

Switching Unit of Measurement

1. Select [Measurement] using the cursor up/down keys.
2. Press the OK key.
3. Select [inch] or [mm].
4. Press the OK key.

Error Handling

1. Select [Error Handling] using the cursor up/down keys.
2. Press the OK key.
3. Select [DuplexPagerError] using the cursor up/down keys.
4. Press the OK key.
5. Select the method to handle if duplex is disabled.
6. Press the OK key.
7. Select [PagerMismatchErr] using the cursor up/down keys.
8. Press the OK key.
9. Select the method to handle paper mismatch.
10. Press the OK key.

Orig.Orientation

1. Select [Function Default] using the cursor up/down keys.
2. Press the OK key.
3. Select [Orig.Orientation] using the cursor up/down keys.
4. Press the OK key.
5. Select [Top Edge Top] or [Top Edge Left].
6. Press the OK key.

Continuous Scan

1. Select [Function Default] using the cursor up/down keys.
2. Press the OK key.
3. Select [Continuous Scan] using the cursor up/down keys.
4. Press the OK key.
5. Select [Off] or [On].
6. Press the OK key.

Original Image

1. Select [Function Default] using the cursor up/down keys.
2. Press the OK key.
3. Select [Original Image] using the cursor up/down keys.
4. Press the OK key.
5. Select [Text+Photo], [Photo], [Text] or [for OCR].
6. Press the OK key.

Scan Resolution

1. Select [Function Default] using the cursor up/down keys.
2. Press the OK key.
3. Select [Scan Resolution] using the cursor up/down keys.
4. Press the OK key.
5. Select the default resolution.
6. Press the OK key.

Color Selection

1. Select [Function Default] using the cursor up/down keys.
2. Press the OK key.
3. Select [Color Selection] using the cursor up/down keys.
4. Press the OK key.
5. Select [Full Color], [Grayscale] or [Black & White].
6. Press the OK key.

File Format

1. Select [Function Default] using the cursor up/down keys.
2. Press the OK key.
3. Select [File Format] using the cursor up/down keys.
4. Press the OK key.
5. Select [PDF], [TIFF], [XPS] or [JPEG].
6. Press the OK key.

Density

1. Select [Function Default] using the cursor up/down keys.
2. Press the OK key.
3. Select [Density] using the cursor up/down keys.
4. Press the OK key.
5. Select [Auto] or [Manual].
6. Press the OK key.

Zoom

1. Select [Function Default] using the cursor up/down keys.
2. Press the OK key.
3. Select [Zoom] using the cursor up/down keys.
4. Press the OK key.
5. Select [100%] or [Auto].
6. Press the OK key.

File Name Entry

1. Select [Function Default] using the cursor up/down keys.
2. Press the OK key.
3. Select [File Name Entry] using the cursor up/down keys.
4. Press the OK key.
5. Select [None], [Date], [JobNo.], [JobNo. + Date] or [Date + JobNo.].
6. Press the OK key.

Subject/Body

1. Select [Function Default] using the cursor up/down keys.
2. Press the OK key.
3. Select [Subject/Body] using the cursor up/down keys.
4. Press the OK key.
5. Enter the e-mail subject (up to 60 characters).
6. Press the OK key.
7. Enter email body text (up to 500 characters).
8. Press the OK key.

Collate

1. Select [Function Default] using the cursor up/down keys.
2. Press the OK key.
3. Select [Collate] using the cursor up/down keys.
4. Press the OK key.
5. Select [Off] or [On].
6. Press the OK key.

EcoPrint

1. Select [Function Default] using the cursor up/down keys.
2. Press the OK key.
3. Select [EcoPrint] using the cursor up/down keys.
4. Press the OK key.
5. Select [Off] or [On].
6. Press the OK key.

2 in 1 Layout

1. Select [Function Default] using the cursor up/down keys.
2. Press the OK key.
3. Select [Detail Setting] using the cursor up/down keys.
4. Press the OK key.
5. Select [2 in 1 Layout] using the cursor up/down keys.
6. Press the OK key.
7. Select [L to R T to B] or [R to L].
8. Press the OK key.

4 in 1 Layout

1. Select [Function Default] using the cursor up/down keys.
2. Press the OK key.
3. Select [Detail Setting] using the cursor up/down keys.
4. Press the OK key.
5. Select [4 in 1 Layout] using the cursor up/down keys.
6. Press the OK key.
7. Select [Right then Down], [Down then Right], [Left then Down] or [Down then Left].
8. Press the OK key.

Border Line

1. Select [Function Default] using the cursor up/down keys.
2. Press the OK key.
3. Select [Detail Setting] using the cursor up/down keys.
4. Press the OK key.
5. Select [Border Line] using the cursor up/down keys.
6. Press the OK key.
7. Select [None], [Solid Line], [Dotted Line] or [Positioning Mark].
8. Press the OK key.

Orig. Binding

1. Select [Function Default] using the cursor up/down keys.
2. Press the OK key.
3. Select [Detail Setting] using the cursor up/down keys.
4. Press the OK key.
5. Select [Orig. Binding] using the cursor up/down keys.
6. Press the OK key.
7. Select [Left/Right] or [Top].
8. Press the OK key.

Finish Binding

1. Select [Function Default] using the cursor up/down keys.
2. Press the OK key.
3. Select [Detail Setting] using the cursor up/down keys.
4. Press the OK key.
5. Select [Finish Binding] using the cursor up/down keys.
6. Press the OK key.
7. Select [Left/Right] or [Top].
8. Press the OK key.

Image Quality

1. Select [Function Default] using the cursor up/down keys.
2. Press the OK key.
3. Select [Detail Setting] using the cursor up/down keys.
4. Press the OK key.
5. Select [Image Quality] using the cursor up/down keys.
6. Press the OK key.
7. Select the image quality.
   [1 Low(High Comp)] to [5 High(Low Comp)]
8. Press the OK key.

Color TIFF Comp.

1. Select [Function Default] using the cursor up/down keys.
2. Press the OK key.
3. Select [Detail Setting] using the cursor up/down keys.
4. Press the OK key.
5. Select [Color TIFF Comp.] using the cursor up/down keys.
6. Press the OK key.
7. Select [TIFF V6] or [TTN2].
8. Press the OK key.

XPS FitTo Page

1. Select [Function Default] using the cursor up/down keys.
2. Press the OK key.
3. Select [Detail Setting] using the cursor up/down keys.
4. Press the OK key.
5. Select [XPS FitTo Page] using the cursor up/down keys.
6. Press the OK key.
7. Select [On] or [Off].
8. Press the OK key.

Margin Default

1. Press cursor down key, [Next] of Function Defaults, cursor down key and then [Change] of Margin Default.
2. Use the [+] or [-] to enter the margin widths for Left/Right and Top/Bottom(-0.75 - +0.75).
   You can use the number keypad to enter the number directly.
3. Press [OK].

Login Operation

1. Select [Login Operation] using the cursor up/down keys.
2. Press the OK key.
3. Select [Use Numeric Key] or [Select Character].
4. Press the OK key.

(3) Copy Settings

Photo Processing

1. Select [Photo Processing] using the cursor up/down keys.
2. Press the OK key.
3. Select [Dithering(Normal)] or [Dithering(Rough)].
4. Press the OK key.

Paper Selection

1. Select [Paper Selection] using the cursor up/down keys.
2. Press the OK key.
3. Select [Auto] or [Def. Paper Source].
4. Press the OK key.

Auto Paper Selection

1. Select [AutoPaperSelect.] using the cursor up/down keys.
2. Press the OK key.
3. Select [MostSuitableSize] or [Same as OrigSize].
4. Press the OK key.

Auto % Priority

1. Select [Auto % Priority.] using the cursor up/down keys.
2. Press the OK key.
3. Select [Off] or [On].
4. Press the OK key.

Select Key Set

1. Select [Select Key Set.] using the cursor up/down keys.
2. Press the OK key.
3. Select [Left] or [Right].
4. Press the OK key.
5. select the function you want to register to the flexible key.
6. Press the OK key.

(4) Sending Settings

Select Key Set

1. Select [Select Key Set.] using the cursor up/down keys.
2. Press the OK key.
3. Select [Left] or [Right].
4. Press the OK key.
5. Select the function you want to register to the flexible key.
6. Press the OK key.

DestinationCheck

1. Select [DestinationCheck] using the cursor up/down keys.
2. Press the OK key.
3. Select [Dest. Confirm] or [Check New Dest.].
4. Press the OK key.
5. Select [Off] or [On].
6. Press the OK key.

(5) Document Box Settings

Select Key Set

1. Select [Select Key Set.] using the cursor up/down keys.
2. Press the OK key.
3. Select [Print] or [Store].
4. Press the OK key.
5. Select [Left] or [Right].
6. Press the OK key.
7. Select the function you want to register to the flexible key.
8. Press the OK key.

(6) Printer Settings

Emuration Set

1. Select [Emuration Set.] using the cursor up/down keys.
2. Press the OK key.
3. Select the printer you want to emulate.
4. Press the OK key.

When KPDL Is Selected for Emulation

1. Select [Emuration Set.] using the cursor up/down keys.
2. Press the OK key.
3. Select [KPDL] and press the OK key.
4. Select [Off] or [On].
5. Press the OK key.

When KPDL(Auto) Is Selected for Emulation

1. Select [Emuration Set.] using the cursor up/down keys.
2. Press the OK key.
3. Select [KPDL(Auto)] and press the OK key.
4. Select the printer for alternative emulation.
5. Press the OK key.
6. Select [Off] or [On].
7. Press the OK key.

EcoPrint

1. Select [EcoPrint] using the cursor up/down keys.
2. Press the OK key.
3. Select [Off] or [On].
4. Press the OK key.

Override A4/LTR

1. Select [Override A4/LTR] using the cursor up/down keys.
2. Press the OK key.
3. Select [Off] or [On].
4. Press the OK key.

Duplex

1. Select [Duplex] using the cursor up/down keys.
2. Press the OK key.
3. Select [Off], [Bind Long Edge] or [Bind Short Edge].
4. Press the OK key.

Copies

1. Select [Copies] using the cursor up/down keys.
2. Press the OK key.
3. Set the default number of copies.
4. Press the OK key.

Orientation

1. Select [Orientation] using the cursor up/down keys.
2. Press the OK key.
3. Select [Portrait] or [Landscape].
4. Press the OK key.

FormFeed Timeout

1. Select [FormFeed Timeout] using the cursor up/down keys.
2. Press the OK key.
3. Set the Form Feed Timeout.
4. Press the OK key.

LF Action

1. Select [LF Action] using the cursor up/down keys.
2. Press the OK key.
3. Select [LF Only], [LF and CR] or [Ignore LF].
4. Press the OK key.

CR Action

1. Select [CR Action] using the cursor up/down keys.
2. Press the OK key.
3. Select [CR Only], [LF and CR] or [Ignore CR].
4. Press the OK key.

Paper Feed Mode

1. Select [Paper Feed Mode] using the cursor up/down keys.
2. Press the OK key.
3. Select [Auto] or [Fixed].
4. Press the OK key.

(7) Printing Reports/Sending Notice

Printing Reports

1. Select [Report Print] using the cursor up/down keys.
2. Press the OK key.
3. Select [Menu Map], [Status Page] or [Font List].
4. Press the OK key.
5. Select [Yes].
   The selected report is output.

Send Result Report

1. Select [Result Rpt Set.] using the cursor up/down keys.
2. Press the OK key.
3. Select [Send Result] using the cursor up/down keys.
4. Press the OK key.
5. Select [E-mail/Folder] using the cursor up/down keys.
6. Select [Off], [On] or [Error Only].
7. Press the OK key.

(8) Adjustment/Maintenance

Copy Denst. Adj.

1. Select [Copy Denst. Adj.] using the cursor up/down keys.
2. Press the OK key.
3. Select [Auto] or [Manual].
4. Press the OK key.
5. Adjusting the density.
   [-3 Lighter] to [+3 Darker]
6. Press the OK key.

Send/Box Density

1. Select [Send/Box Density] using the cursor up/down keys.
2. Press the OK key.
3. Select [Auto] or [Manual].
4. Press the OK key.
5. Adjusting the density.
   [-3 Lighter] to [+3 Darker]
6. Press the OK key.

Correct. Bk Line

1. Select [Correct. Bk Line] using the cursor up/down keys.
2. Press the OK key.
3. Select [Off], [On(Low)] or [On(High)].
4. Press the OK key.

New Developer

1. Select [Service Setting] using the cursor up/down keys.
2. Press the OK key.
3. Select [New Developer] using the cursor up/down keys.
4. Press the OK key.
5. Select [Yes].

(9) Date/Timer

Date/Time

1. Select [Date Setting] using the cursor up/down keys.
2. Press the OK key.
3. Select [Date/Time] using the cursor up/down keys.
4. Press the OK key.
5. Set the date and press the OK key.
6. Set the time and press the OK key.

Date Format

1. Select [Date Setting] using the cursor up/down keys.
2. Press the OK key.
3. Select [Date Format] using the cursor up/down keys.
4. Press the OK key.
5. Select [Month/Day/Year], [Day/Month/Year] or [Year/Month/Day].
6. Press the OK key.

Time Zone

1. Select [Date Setting] using the cursor up/down keys.
2. Press the OK key.
3. Select [Time Zone] using the cursor up/down keys.
4. Press the OK key.
5. Select your location.
6. Press the OK key.

Summer Time

1. Select [Date Setting] using the cursor up/down keys.
2. Press the OK key.
3. Select [Summer Time] using the cursor up/down keys.
4. Press the OK key.
5. Select [Off] or [On].
6. Press the OK key.

Auto Error Clear ON/OFF

1. Select [Timer Setting] using the cursor up/down keys.
2. Press the OK key.
3. Select [Auto Err. Clear] using the cursor up/down keys.
4. Press the OK key.
5. Select [Off] or [On].
6. Press the OK key.

Error Clear Timer

1. Select [Timer Setting] using the cursor up/down keys.
2. Press the OK key.
3. Select [Err. Clear Timer] using the cursor up/down keys.
4. Press the OK key.
5. Set the Error Clear Timer.
6. Press the OK key.

Auto Sleep

1. Select [Timer Setting] using the cursor up/down keys.
2. Press the OK key.
3. Select [Auto Sleep] using the cursor up/down keys.
4. Press the OK key.
5. Select [Off] or [On].
6. Press the OK key.

Sleep Timer

1. Select [Timer Setting] using the cursor up/down keys.
2. Press the OK key.
3. Select [Sleep Timer] using the cursor up/down keys.
4. Press the OK key.
5. Set the Sleep Timer.
6. Press the OK key.

Auto Panel Reset ON/OFF

1. Select [Timer Setting] using the cursor up/down keys.
2. Press the OK key.
3. Select [Auto Panel Reset] using the cursor up/down keys.
4. Press the OK key.
5. Select [Off] or [On].
6. Press the OK key.

Panel Reset Timer

1. Select [Timer Setting] using the cursor up/down keys.
2. Press the OK key.
3. Select [Panel Reset Timer] using the cursor up/down keys.
4. Press the OK key.
5. Set the Panel Reset Timer.
6. Press the OK key.

Low Power Timer

1. Select [Timer Setting] using the cursor up/down keys.
2. Press the OK key.
3. Select [Low Power Timer] using the cursor up/down keys.
4. Press the OK key.
5. Set the Low Power Timer.
6. Press the OK key.

Unusable Time

1. Select [Timer Setting] using the cursor up/down keys.
2. Press the OK key.
3. Select [Unusable Time] using the cursor up/down keys.
4. Press the OK key.
5. Select [On] and press the OK key.
6. Set the Start Time and press the OK key.
7. Set the End Time and press the OK key.
8. Set the unlock code and press the OK key.

(10) Editing Destination (Address Book/Adding One-Touch Keys)

Adding an Individual Destination

1. Select [Address Book] using the cursor up/down keys.
2. Press the OK key.
3. Select [Menu].
4. Select [Add Address] using the cursor up/down keys.
5. Press the OK key.
6. Select [Contact] and press the OK key.
7. Enter each item and press the OK key.

Adding a Group

1. Select [Address Book] using the cursor up/down keys.
2. Press the OK key.
3. Select [Menu].
4. Select [Add Address] using the cursor up/down keys.
5. Press the OK key.
6. Select [Group] and press the OK key.
7. Enter each item and press the OK key.

Editing a Destination

1. Select [Address Book] using the cursor up/down keys.
2. Press the OK key.
3. Select the destination you want to edit.
4. Select [Menu].
5. Select [Detail/Edit] using the cursor up/down keys.
6. Press the OK key.
7. Edit items as necessary.
8. Select [Yes].

(11) Restarting the System

Restarting the System

1. Select [Restart] using the cursor up/down keys.
2. Press the OK key.
3. Select [Yes].
   The machine is restarted.

(12) Network Setup

LAN Interface Setup

1. Select [Network Setting] using the cursor up/down keys.
2. Press the OK key.
3. Select [LAN Interface] using the cursor up/down keys.
4. Press the OK key.
5. Select the desired LAN interface.
6. Press the OK key.

TCP/IP (IPv4) Setup

1. Select [Network Setting] using the cursor up/down keys.
2. Press the OK key.
3. Select [TCP/IP Settings] using the cursor up/down keys.
4. Press the OK key.
5. Select [TCP/IP] using the cursor up/down keys.
6. Press the OK key.
7. Select [On] and press the OK key.
8. Select [IPv4 Setting] using the cursor up/down keys.
9. Press the OK key.
10. Select [DHCP] using the cursor up/down keys.
11. Press the OK key.
12. Select [Off] and press the OK key.
13. Select [Bonjour] using the cursor up/down keys.
14. Press the OK key.
15. Select [Off] and press the OK key.
16. Select [IP Address] using the cursor up/down keys.
17. Press the OK key.
18. Enter the IP address and press the OK key.
19. Select [Subnet Mask] using the cursor up/down keys.
20. Press the OK key.
21. Enter the Subnet Mask and press the OK key.
22. Select [Default Gateway] using the cursor up/down keys.
23. Press the OK key.
24. Enter the Default Gateway and press the OK key.

TCP/IP (IPv6) Setup

1. Select [Network Setting] using the cursor up/down keys.
2. Press the OK key.
3. Select [TCP/IP Settings] using the cursor up/down keys.
4. Press the OK key.
5. Select [IPv6 Setting] using the cursor up/down keys.
6. Press the OK key.
7. Select [On] or [Off].
8. Press the OK key.

NetWare Setup

1. Select [Network Setting] using the cursor up/down keys.
2. Press the OK key.
3. Select [NetWare] using the cursor up/down keys.
4. Press the OK key.
5. Select [On] or [Off].
6. Press the OK key.
7. Select the desired frame type.
8. Press the OK key.

AppleTalk Setup

1. Select [Network Setting] using the cursor up/down keys.
2. Press the OK key.
3. Select [AppleTalk] using the cursor up/down keys.
4. Press the OK key.
5. Select [On] or [Off].
6. Press the OK key.

WSD Scan Setup

1. Select [Network Setting] using the cursor up/down keys.
2. Press the OK key.
3. Select [WSD-SCAN] using the cursor up/down keys.
4. Press the OK key.
5. Select [On] or [Off].
6. Press the OK key.

WSD Print Setup

1. Select [Network Setting] using the cursor up/down keys.
2. Press the OK key.
3. Select [WSD-PRINT] using the cursor up/down keys.
4. Press the OK key.
5. Select [On] or [Off].
6. Press the OK key.

Protocol Detail

1. Select [Network Setting] using the cursor up/down keys.
2. Press the OK key.
3. Select [TCP/IP Settings] using the cursor up/down keys.
4. Press the OK key.
5. Select [Protocol Detail] using the cursor up/down keys.
6. Press the OK key.
7. Select the item for which you want to make settings.
8. Select [On] or [Off].
9. Press the OK key.

Network Security

SSL Setting

1. Select [Network Setting] using the cursor up/down keys.
2. Press the OK key.
3. Select [Secure Protocol] using the cursor up/down keys.
4. Press the OK key.
5. Select [SSL] using the cursor up/down keys.
6. Press the OK key.
7. Select [On] or [Off].
8. Press the OK key.

IPP Security

1. Select [Network Setting] using the cursor up/down keys.
2. Press the OK key.
3. Select [Secure Protocol] using the cursor up/down keys.
4. Press the OK key.
5. Select [IPP Security] using the cursor up/down keys.
6. Press the OK key.
7. Select [IPP/IPP over SSL] or [IPPoverSSL only].
8. Press the OK key.

HTTP Security

1. Select [Network Setting] using the cursor up/down keys.
2. Press the OK key.
3. Select [Secure Protocol] using the cursor up/down keys.
4. Press the OK key.
5. Select [HTTP Security] using the cursor up/down keys.
6. Press the OK key.
7. Select [HTTP/HTTPS] or [HTTPS only].
8. Press the OK key.

LDAP Security

1. Select [Network Setting] using the cursor up/down keys.
2. Press the OK key.
3. Select [Secure Protocol] using the cursor up/down keys.
4. Press the OK key.
5. Select [LDAP Security] using the cursor up/down keys.
6. Press the OK key.
7. Select [Off], [LDAPv3/TLS] or [LDAP over SSL].
8. Press the OK key.

LDAP Security

1. Select [Network Setting] using the cursor up/down keys.
2. Press the OK key.
3. Select [IPSec] using the cursor up/down keys.
4. Press the OK key.
5. Select [On] or [Off].
6. Press the OK key.

Interface Block Setting

USB Host (USB memory slot setting)

1. Select [I/F Block Set.] using the cursor up/down keys.
2. Press the OK key.
3. Select [USB Host] using the cursor up/down keys.
4. Press the OK key.
5. Select [Unblock] or [Block].
6. Press the OK key.

USB Device (USB interface setting)

1. Select [I/F Block Set.] using the cursor up/down keys.
2. Press the OK key.
3. Select [USB Device] using the cursor up/down keys.
4. Press the OK key.
5. Select [Unblock] or [Block].
6. Press the OK key.

Optional interface (Optional interface card setting)

1. Select [I/F Block Set.] using the cursor up/down keys.
2. Press the OK key.
3. Select [Option I/F] using the cursor up/down keys.
4. Press the OK key.
5. Select [Unblock] or [Block].
6. Press the OK key.

(13) User Login Administration

Enabling/Disabling User Login Administration

1. Select [User Login Set.] using the cursor up/down keys.
2. Press the OK key.
3. Select [User Login] using the cursor up/down keys.
4. Press the OK key.
5. Select [Local Authentic.] or [Netwk Authentic.]. Select [Off] to disable user login administration. If you select [Netwk Authentic.], enter the host name (64 characters or less) and domain name (256 characters or less) for the Authentication Server. Select [NTLM] or [Kerberos] as the server type.
6. Press the OK key.

Adding a User

1. Select [User Login Set.] using the cursor up/down keys.
2. Press the OK key.
3. Select [Local User List] using the cursor up/down keys.
4. Press the OK key.
5. Select [Menu].
6. Select [Add User] and press the OK key.
7. Enter the user name and press the OK key.
8. Enter the login user name and press the OK key.
9. Select [Exit] and press the OK key.
10. Select the added user and press the OK key.
11. Select [Login Password:].
12. Select [Edit] and enter the login password.
13. Press the OK key.
14. Enter the same login password to confirm and press the OK key.
15. Select [E-mailAddress:].
16. Select [Edit] and enter the e-mail address.
17. Press the OK key.
18. Select [Access Level:]
19. Select [Change] and select the user access privilege.
20. Press the OK key.
21. Select [Account Name:].
22. Select [Change] and select the account.
23. Press the OK key.
24. Press the OK key.

Changing User Properties

1. Select [User Login Set.] using the cursor up/down keys.
2. Press the OK key.
3. Select [Local User List] using the cursor up/down keys.
4. Press the OK key.
5. Select the user whose information you want to change.
   The procedure differs depending on the details to be edited.
   Changing user information
   1. Select [Edit].
   2. In the same fashion as registering a new user, change information.
   3. Press the OK key.
   4. Select [Yes]. The user information is changed.
   Deleting a user
   1. Select [Menu].
   2. Select [Delete] and press the OK key.
   3. Select [Yes]. The selected user will be deleted.

Unknown login user name Job

1. Select [User Login Set.] using the cursor up/down keys.
2. Press the OK key.
3. Select [Unknown ID Job] using the cursor up/down keys.
4. Press the OK key.
5. Select [Reject] or [Permit].
6. Press the OK key.

(14) Job accounting

Enabling/Disabling Job Accounting

1. Select [Job Account. Set.] using the cursor up/down keys.
2. Press the OK key.
3. Select [Job Accountin] using the cursor up/down keys.
4. Press the OK key.
5. Select [On] or [Off].
6. Press the OK key.

Adding an Account

1. Select [Job Account. Set.] using the cursor up/down keys.
2. Press the OK key.
3. Select [Account. List] using the cursor up/down keys.
4. Press the OK key.
5. Select [Menu].
6. Select [Add Account], and press the OK key.
7. Enter the account name and press the OK key.
8. Enter the account code and press the OK key.
9. Select [Exit] and press the OK key.

Managing Accounts

1. Select [Job Account. Set.] using the cursor up/down keys.
2. Press the OK key.
3. Select [Account. List] using the cursor up/down keys.
4. Press the OK key.
5. Select an account to change or delete.
   Changing account information
   1. Select [Edit].
   2. Change account information and restriction of use.
   3. Press the OK key.
   4. Select [Yes]. The account information is changed.
   Deleting an account
   1. Select [Menu].
   2. Select [Delete] and press the OK key.
   3. Select [Yes]. The account is deleted.

Managing the Copier/Printer Counts

1. Select [Job Account. Set.] using the cursor up/down keys.
2. Press the OK key.
3. Select [Default Setting] using the cursor up/down keys.
4. Press the OK key.
5. Select [Copy/Print Count] using the cursor up/down keys.
6. Press the OK key.
7. Select [Total] or [Split].
8. Press the OK key.

Applying Restriction

1. Select [Job Account. Set.] using the cursor up/down keys.
2. Press the OK key.
3. Select [Account. List] using the cursor up/down keys.
4. Press the OK key.
5. Select the account to which you want to set restriction of use and press the OK key.
6. Select the item to be restricted and select [Edit].
7. Select the desired restriction method and press the OK key.
8. Repeat step 6 to 7 to set items as necessary.
9. Press the OK key.
10. Select [Yes].

Applying Limit of Restriction

1. Select [Job Account. Set.] using the cursor up/down keys.
2. Press the OK key.
3. Select [Default Setting] using the cursor up/down keys.
4. Press the OK key.
5. Select [Apply Limit] using the cursor up/down keys.
6. Press the OK key.
7. Select [Immediately], [Subsequently] or [Alert Only].
8. Press the OK key.

Default Counter Limit

1. Select [Job Account. Set.] using the cursor up/down keys.
2. Press the OK key.
3. Select [Default Setting] using the cursor up/down keys.
4. Press the OK key.
5. Select [Counter Limit] using the cursor up/down keys.
6. Press the OK key.
7. Select the item for which you want to set the default restriction on the number of sheets and press the OK key.
8. Enter the default restriction on the number of sheets and press the OK key.
9. Repeat steps 7 to 8 set other default restrictions on the number of sheets.

Total Job Accounting/Resetting the Counter

1. Select [Job Account. Set.] using the cursor up/down keys.
2. Press the OK key.
3. Select [Total Accounting] using the cursor up/down keys.
4. Press the OK key.
5. Select the function of which you want to check counts and press the OK key.
6. After confirming the content press the OK key.
7. To reset the counter, select [Counter Reset].
8. Press the OK key.
9. Select [Yes].

Each Job Accounting/Resetting the Counter

1. Select [Job Account. Set.] using the cursor up/down keys.
2. Press the OK key.
3. Select [Each Job Account] using the cursor up/down keys.
4. Press the OK key.
5. Select the account of which you want to check counts and press the OK key.
6. Select the function of which you want to check counts and press the OK key.
7. After confirming the content press the OK key.
8. To reset the counter, select [Counter Reset].
9. Press the OK key.
10. Select [Yes].

Printing an Accounting Report

1. Select [Job Account. Set.] using the cursor up/down keys.
2. Press the OK key.
3. Select [Account. Report] using the cursor up/down keys.
4. Press the OK key.
5. Select [Yes]. A job accounting report is printed.

This page is intentionally left blank.

1-4-1 Paper misfeed detection

(1) Paper misfeed indication

When a paper misfeed occurs, the printer immediately stops printing and displays the paper misfeed message on the operation panel. To remove paper misfed in the printer, pull out the paper cassette, open the front cover, rear cover or duplexer's cover, or remove the drum unit.

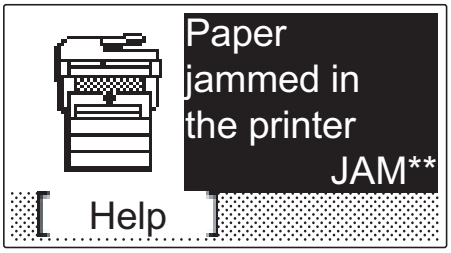

Figure 1-4-1Paper misfeed indication

(2) Paper misfeed detection condition

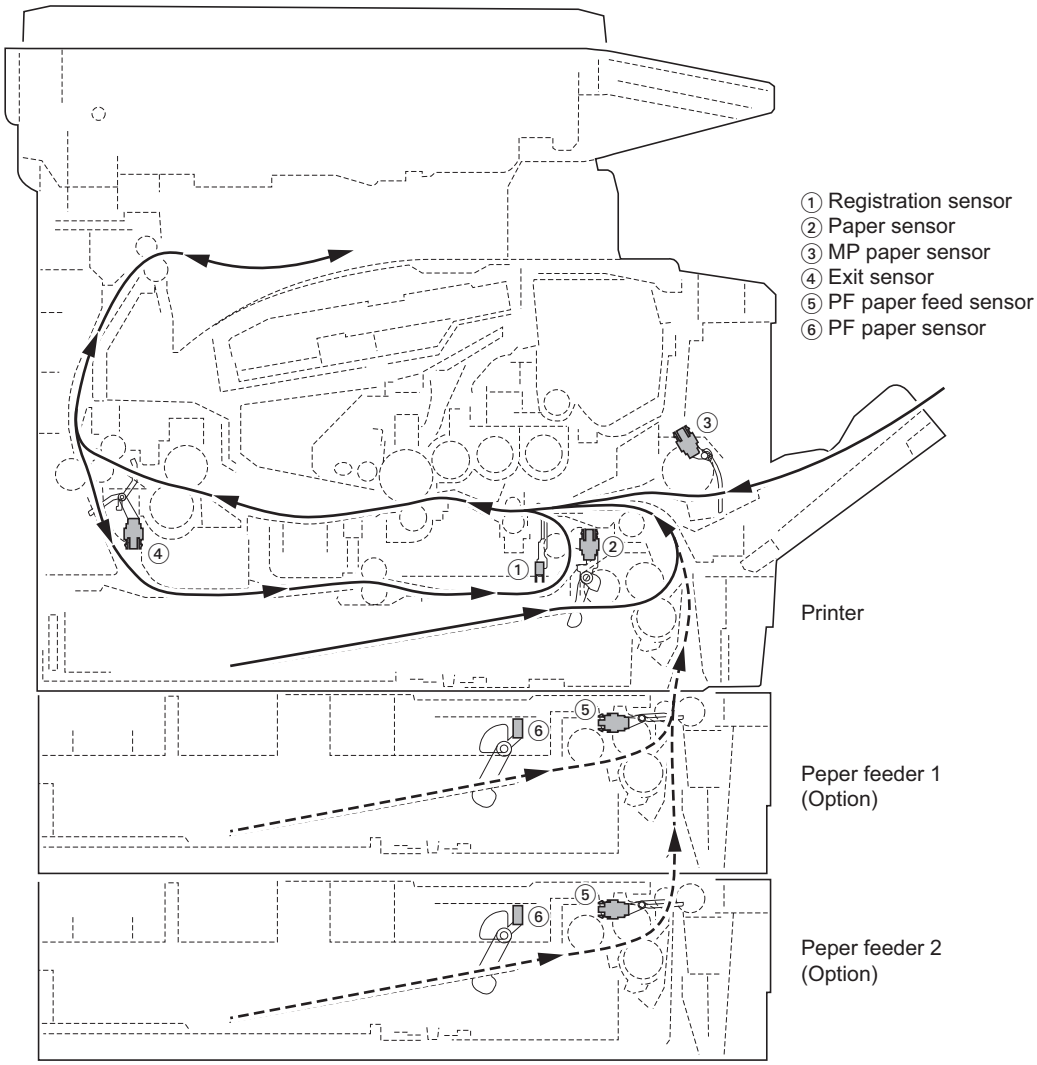

Figure 1-4-2

1-4-2 Self-diagnostic function

(1) Self-diagnostic function

This printer is equipped with self-diagnostic function. When a problem is detected, the printer stops printing and display an error message on the operation panel. An error message consists of a message prompting a contact to service personnel, total print count, and a four-digit error code indicating the type of the error. (The display varies depending on the type of the error.)

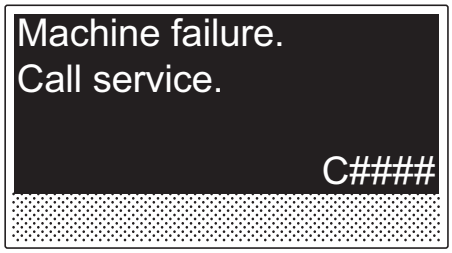

Figure 1-4-3

(2) Self diagnostic codes

Code	Contents	Remarks	
		Causes	Check procedures/corrective measures
0100	**Backup memory device error**	Defective flash memory.	Replace the control PWB (See page 1-5-39).
		Defective control PWB.	Replace the control PWB (See page 1-5-39).
0120	**MAC address data error**	Defective flash memory.	Replace the control PWB (See page 1-5-39).
0130	**Backup memory read/write error**	Defective flash memory.	Replace the control PWB (See page 1-5-39).
		Defective control PWB.	Replace the control PWB (See page 1-5-39).
0140	**Backup memory data error**	Defective flash memory.	Replace the control PWB (See page 1-5-39).
		Defective control PWB.	Replace the control PWB (See page 1-5-39).
0150	**Control PWB EEPROM error** Detecting control PWB EEPROM (U17) communication error.	Improper installation control PWB EEPROM (U17).	Check the installation of the EEPROM (U17) and remedy if necessary (See page 1-5-39).
		Defective control PWB.	Replace the control PWB (See page 1-5-39).
		Data damage of control PWB EEPROM (U17).	Contact the Service Administrative Division.
0170	**Billing counting error**	Defective control PWB.	Replace the control PWB (See page 1-5-39).
		Data damage of control PWB EEPROM (U17).	Contact the Service Administrative Division.
0180	**Machine number mismatch** Machine number of main and engine does not match.	Data damage of control PWB EEPROM (U17).	Contact the Service Administrative Division.

Code	Contents	Remarks	
		Causes	Check procedures/corrective measures
0420	**Paper feeder communication error** Communication error between control PWB and optional paper feeder.	Improper installation paper feeder.	Follow installation instruction carefully again.
		Defective harness between control PWB (YC30) and paper feeder interface connector, or improper connector insertion.	Reinsert the connector. Also check for continuity within the connector harness. If none, remedy or replace the harness.
		Defective control PWB.	Replace the control PWB (See page 1-5-39).
		Defective harness between PF main PWB (YC5) and paper feeder interface connector, or improper connector insertion.	Reinsert the connector. Also check for continuity within the connector harness. If none, remedy or replace the harness (Refer to the service manual for the paper feeder).
		Defective PF main-PWB.	Replace the PF main PWB (Refer to the service manual for the paper feeder).
2000	**Main motor error** The main motor ready input is not given for 2 s during the main motor is ON.	Defective harness between main motor (CN1) and control PWB (YC17), or improper connector insertion.	Reinsert the connector. Also check for continuity within the connector harness. If none, remedy or replace the harness (See page 1-5-50).
		Defective drive transmission system of the main motor.	Check if the rollers and gears rotate smoothly. If not, grease the bushings and gears. Check for broken gears and replace if any.
		Defective main motor.	Replace the main motor (See page 1-5-50).
		Defective control PWB.	Replace the control PWB (See page 1-5-39).
2610	**PF paper feed motor error (Optional paper feeder 1)** The PF paper feed motor of paper feeder 1 ready input is not given for 2 s during the PF paper feed motor is ON.	Defective harness between PF paper feed motor and PF main PWB (YC4), or improper connector insertion.	Reinsert the connector. Also check for continuity within the connector harness. If none, remedy or replace the harness (Refer to the service manual for the paper feeder).
		Defective PF paper feed motor drive transmission system.	Check if the gears rotate smoothly. If not, grease the bushings and gears. Check for broken gears and replace if any.
		Defective PF main motor.	Replace the PF main motor.
		Defective control PWB.	Replace the control PWB (See page 1-5-39).

Code	Contents	Remarks	
		Causes	Check procedures/corrective measures
2620	**PF paper feed motor error (Optional paper feeder 2)** The PF paper feed motor of paper feeder 2 ready input is not given for 2 s during the PF paper feed motor is ON.	Defective harness between PF paper feed motor and PF main PWB (YC4), or improper connector insertion.	Reinsert the connector. Also check for continuity within the connector harness. If none, remedy or replace the harness (Refer to the service manual for the paper feeder).
		Defective PF paper feed motor drive transmission system.	Check if the gears rotate smoothly. If not, grease the bushings and gears. Check for broken gears and replace if any.
		Defective PF main motor.	Replace the PF main motor (Refer to the service manual for the paper feeder).
		Defective control PWB.	Replace the control PWB (See page 1-5-39).
3100	**ISU home position error**	Defective FFC between CCD PWB (YC1) and control PWB (YC8).	Replace the image scanner unit (ISU) (See page 1-5-21).
		Defective FFC between control PWB (YC6) and scanner PWB (YC103), or improper FFC insertion.	Reinsert the FFC. Also check for continuity within the FFC. If none, remedy or replace the FFC.
		Defective home position sensor.	Replace the home position sensor.
		Defective harness between ISU motor and scanner PWB (YC104), or improper connector insertion.	Reinsert the connector. Also check for continuity within the connector harness. If none, remedy or replace the harness.
		Defective ISU motor.	Replace the ISU motor.

Code	Contents	Remarks	
		Causes	Check procedures/corrective measures
3200	**Exposure lamp error** The exposure lamp is not turned on.	Defective FFC between scanner PWB (YC103) and control PWB (YC6), or improper FFC insertion.	Reinsert the FFC. Also check for continuity within the FFC. If none, remedy or replace the FFC.
		Defective FFC between CCD PWB (YC1) and control PWB (YC8).	Replace the image scanner unit (ISU) (See page 1-5-21).
		Defective harness between CCD PWB (YC3) and inverter PWB (YC101), or improper connector insertion.	Reinsert the connector. Also check for continuity within the connector harness. If none, remedy or replace the harness.
		Defective harness between inverter PWB (YC102) and exposure lamp, or improper connector insertion.	Reinsert the connector. Also check for continuity within the connector harness. If none, remedy or replace the harness.
		Defective exposure lamp.	Replace the exposure lamp (See page 1-5-27).
		Defective inverter PWB.	Replace the inverter PWB (See page 1-5-27).
		Defective control PWB.	Replace the control PWB (See page 1-5-39).
3300	**AGC error** After AGC, correct input is not obtained at CCD.	Defective FFC between CCD PWB (YC1) and control PWB (YC8).	Replace the image scanner unit (ISU) (See page 1-5-21).
		Defective exposure lamp.	Replace the exposure lamp (See page 1-5-27).
		Defective CCD PWB.	Replace the CCD PWB.
		Defective control PWB.	Replace the control PWB (See page 1-5-39).

Code	Contents	Remarks	
		Causes	Check procedures/corrective measures
3500	**CPU - ASIC (CCD PWB) communication error** An error code is detected.	Defective FFC between CCD PWB (YC1) and control PWB (YC8).	Replace the image scanner unit (ISU) (See page 1-5-21).
		Defective CCD PWB.	Replace the CCD PWB.
		Defective control PWB.	Replace the control PWB (See page 1-5-39).
4000	**Polygon motor (laser scanner unit) error** The polygon motor ready input is not given for 6 s during the polygon motor is ON.	Defective harness between polygon motor and control PWB (YC10), or improper connector insertion.	Reinsert the connector. Also check for continuity within the connector harness. If none, remedy or replace the harness.
		Defective laser scanner unit.	Replace the laser scanner unit (See page 1-5-17).
		Defective control PWB.	Replace the control PWB (See page 1-5-39).
4200	**BD error (laser scanner unit) error**	BD sensor does not detect laser beam due to condensation on the polygon mirror.	Turn printer power off for at least 30 minutes, then turn printer on again. If not cured, replace the laser scanner unit (See page 1-5-17).
		Defective laser scanner unit.	Replace the laser scanner unit (See page 1-5-17).
		Defective control PWB.	Replace the control PWB (See page 1-5-39).
6000	**Broken fuser heater lamp wire** The fuser temperature does not rise after the fuser heater lamp has been turned on.	Poor contact in the fuser thermistor connector terminals.	Reinsert the connector (See page 1-5-34).
		Poor contact in the fuser heater lamp connector terminals.	Reinsert the connector (See page 1-5-34).
		Fuser thermistor installed incorrectly.	Replace the fuser unit (See page 1-5-34).
		Fuser thermal cutout triggered.	Replace the fuser unit (See page 1-5-34).
		Fuser heater lamp installed incorrectly.	Replace the fuser unit (See page 1-5-34).
		Broken fuser heater lamp wire.	Replace the fuser unit (See page 1-5-34).
6020	**Abnormally high fuser thermistor temperature** Fuser thermistor detects abnormally temperature.	Shorted fuser thermistor.	Replace the fuser unit (See page 1-5-34).
		Defective control PWB.	Replace the control PWB (See page 1-5-39).

Code	Contents	Remarks	
		Causes	Check procedures/corrective measures
6030	**Broken fuser thermistor wire** Input from fuser thermistor is 0 (A/D value).	Poor contact in the fuser thermistor connector terminals.	Reinsert the connector (See page 1-5-34).
		Broken fuser thermistor wire.	Replace the fuser unit (See page 1-5-34).
		Fuser thermistor installed incorrectly.	Replace the fuser unit (See page 1-5-34).
		Fuser thermal cutout triggered.	Replace the fuser unit (See page 1-5-34).
		Fuser heater lamp installed incorrectly.	Replace the fuser unit (See page 1-5-34).
		Broken fuser heater lamp wire.	Replace the fuser unit (See page 1-5-34).
6400	**Zero cross signal error** The zero cross signal does not reach the control PWB for specified time.	Defective harness between high voltage PWB (YC202) and control PWB (YC23), or improper connector insertion.	Reinsert the connector. Also check for continuity within the connector harness. If none, remedy or replace the harness (See page 1-5-34).
		Defective connection between power source PWB (YC103) and high voltage PWB (YC201).	Reinsert the connector.
		Defective power source PWB.	Replace the power source PWB (See page 1-5-42).
		Defective control PWB.	Replace the control PWB (See page 1-5-39).
7990	**Waste toner full** The waste toner sensor has detected that the waste toner reservoir (drum unit) is full.	Waste toner reservoir (drum unit) is full.	Turn the main power switch off/on to restart the printer. If the error is not resolved, replace the drum unit (See page 1-5-30).
		Defective waste toner sensor.	Replace the waste toner sensor.
		Defective control PWB.	Replace the control PWB (See page 1-5-39).
F000	**Control PWB - Operation panel PWB communication error**	Defective harness between operation panel PWB (YC1) and control PWB (YC7), or improper connector insertion.	Reinsert the connector. Also check for continuity within the connector harness. If none, remedy or replace the harness.
		Defective operation panel PWB.	Replace the operation panel PWB.
		Defective control PWB.	Replace the control PWB (See page 1-5-39).

Code	Contents	Remarks	
		Causes	Check procedures/corrective measures
F020	**Control PWB RAM checksum error**	Defective main memory (RAM) on the control PWB.	Turn the main power switch off/on to restart the printer. If the error is not resolved, replace control PWB (See page 1-5-39).
		Defective expanded memory (DIMM).	Replace the expanded memory (DIMM).
F040	**Control PWB engine communication error**	Defective control PWB.	Turn the main power switch off/on to restart the printer. If the error is not resolved, replace control PWB (See page 1-5-39).
F041	**Control PWB - scanner PWB communication error** A communication error is detected.	Defective control PWB or scanner PWB.	Turn the main power switch off/on to restart the machine. If the error is not resolved, replace control PWB or scanner PWB (See page 1-5-39 or 1-5-49).
F050	**Control PWB engine checksum error**	Some error may have occurred when downloading the firmware of the control PWB.	Download the firmware of the control PWB again (See page 1-6-1).
		Defective control PWB.	Turn the main power switch off/on to restart the printer. If the error is not resolved, replace control PWB (See page 1-5-39).
F186	**Control PWB video data control error**	Defective control PWB.	Turn the main power switch off/on to restart the printer. If the error is not resolved, replace control PWB (See page 1-5-39).

1-4-3 Image formation problems

(1)Completely blank printout.

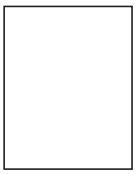

See page 1-4-11

(2)All-black printout.

See page 1-4-11

(3)Dropouts.

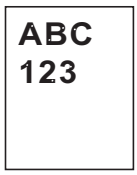

See page 1-4-12

(4)Black dots.

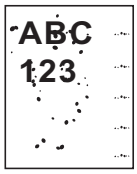

See page 1-4-12

(5)Black horizontal streaks.

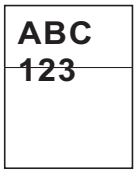

See page 1-4-12

(6)Black vertical streaks.

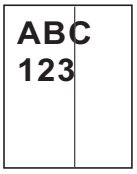

See page 1-4-13

(7)Unsharpness.

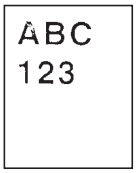

See page 1-4-13

(8)Gray background.

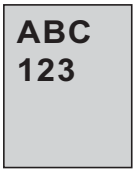

See page 1-4-13

(9)Dirt on the top edge or back of the paper.

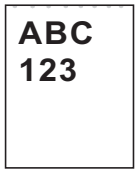

See page 1-4-14

(10)Undulated printing at the right edge (scanning start position).

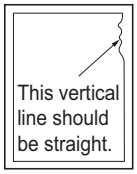

See page 1-4-14

(1) Completely blank printout.

Print example	Causes	Check procedures/corrective measures
	Connection failure with DP connector (Only when the option DP is installed)	If a blank copy is made because the original loaded in the DP is not fed after the Start key is pressed: Turn the main power switch off, investigate the DP connector connection, and firmly connect the DP connector. 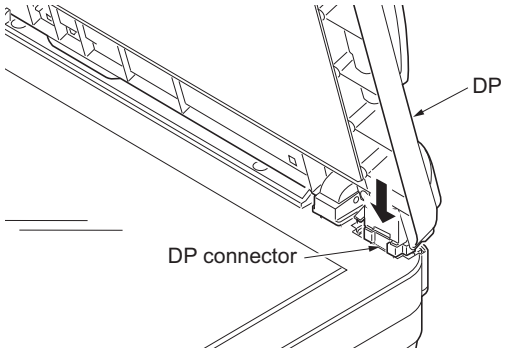
	Defective drum unit or developing unit.	Open the front cover and check that the drum unit and developing unit are correctly seated (See page 1-5-30 and 1-5-29). Investigate that the terminals between the main charger unit and the drum unit are not in loose contact (See page 1-5-31)
	Defective transfer bias output or developing bias output.	Replace the high voltage PWB (See page 1-5-45).
	Poor contact of developing bias terminal (spring) and high voltage output terminal B (J401, J402, J403) on the high voltage PWB. Poor contact of transfer bias terminal (spring) and transfer bias terminal T (J201, J202, J203) on the high voltage PWB.	Check the high voltage PWB visually and correct or replace if necessary (See page 1-5-45).
	Defective laser scanner unit.	Replace the laser scanner unit (See page 1-5-17).
	Defective control PWB.	Replace the control PWB (See page 1-5-39).

(2) All-black printout.

Print example	Causes	Check procedures/corrective measures
	Defective main charger unit.	Open the front cover and check that the drum unit and developing unit are correctly seated (See page 1-5-30 and 1-5-29). Investigate that the terminals between the main charger unit and the drum unit are not in loose contact (See page 1-5-31)
	Poor contact of main charger terminal (spring) and main charger output terminal M on the high voltage PWB.	Check the high voltage PWB visually and correct or replace if necessary (See page 1-5-45).
	Defective main charging output.	Replace the high voltage PWB (See page 1-5-45).
	Broken main charger wire.	Replace the main charger unit (See page 1-5-31).
	Defective control PWB.	Replace the control PWB (See page 1-5-39).

(3) Dropouts.

Print example	Causes	Check procedures/corrective measures
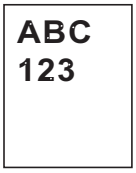	Defective developing roller (developing unit).	If the defects occur at regular intervals of 62.8 mm/2 1/2" (See page 2-4-3), the problem may be the damaged developing roller (in the developing unit). Replace the developing unit (See page 1-5-29).
	Defective drum unit.	If the defects occur at regular intervals of 94 mm/3 11/16" (See page 2-4-3), the problem may be the damaged drum (in the drum unit). Replace the drum unit (See page 1-5-30).
	Defective fuser unit (heat roller or press roller).	If the defects occur at regular intervals of 73.162 mm/2 7/8", or 78.5 mm/3 1/16" (See page 2-4-3), the problem may be the damaged heat roller or press roller (in the fuser unit). Replace fuser unit (See page 1-5-34).
	Defective paper specifications.	Paper with rugged surface or dump tends to cause dropouts. Replace paper with the one that satisfies the paper specifications.
	Defective transfer roller installation.	The transfer roller must be supported by the bushes at the both ends. Clean the bush to remove oil and debris. Replace the transfer roller if necessary (See page 1-5-32).
	Defective transfer bias output.	Replace the high voltage PWB or control PWB (See page 1-5-45 or 1-5-39).

(4) Black dots.

Print example	Causes	Check procedures/corrective measures
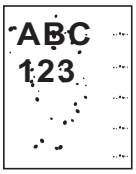	Defective drum unit or developing unit.	If the defects occur at regular intervals of 94 mm/3 11/16" (See page 2-4-3), the problem may be the damaged drum (in the drum unit). Replace drum unit (See page 1-5-30). If the defects occur at random intervals, the toner may be leaking from the developing unit or drum unit. Replace the developing unit or drum unit (See page 1-5-29 or 1-5-30).

(5) Black horizontal streaks.

Print example	Causes	Check procedures/corrective measures
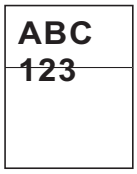	Defective drum unit's ground.	Check that the drum shaft and the grounding tab (printer) are in good contact. Apply the grounding tab a small amount of electroconductive grease as required.
	Defective drum unit.	Replace the drum unit (See page 1-5-30).

(6) Black vertical streaks.

Print example	Causes	Check procedures/corrective measures
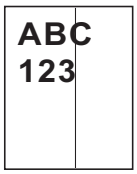	Adhesion of oxide to main charger wire.	Remove the drum unit (See page 1-5-30). Slide the charger cleaner (green) left and right 2 or 3 times to clean the charger wire, then return it to its original position (CLEANER HOME POSITION). Refer to the operation guide.
	Defective drum unit.	A streak of toner remaining on drum after printing means that the cleaning blade (in the drum unit) is not working properly. Replace the drum unit (See page 1-5-30).
	Defective developing roller (developing unit).	Replace the developing unit (See page 1-5-29).

(7) Unsharpness.

Print example	Causes	Check procedures/corrective measures
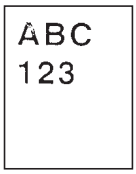	Defective paper specifications.	Replace paper with the one that satisfies the paper specification.
	Defective transfer roller installation.	The transfer roller must be supported by the bushes at the both ends. Clean the bush to remove oil and debris. Replace the transfer roller if necessary (See page 1-5-32).
	Defective transfer bias output.	Replace the high voltage PWB or control PWB (See page 1-5-45 or 1-5-39).
	EcoPrint mode setting.	The EcoPrint mode can provides faint, unsharp printing because it acts to conserve toner for draft printing purpose. For normal printing, turn the EcoPrint mode off by using the operator panel. For details, refer to the operation guide.

(8) Gray background.

Print example	Causes	Check procedures/corrective measures
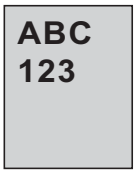	Print density setting.	The print density may be set too high. Try adjusting the print density. For details, refer to the operation guide.
	Defective potential on the drum surface.	Replace the drum unit (See page 1-5-30).
	Defective main charger grid.	Clean the main charger grid (See page 1-5-31).
	Defective developing roller (developing unit).	If a developing unit which is known to work normally is available for check, replace the current developing unit in the printer with the normal one. If the symptom disappears, replace the developing unit with a new one (See page 1-5-29).

(9) Dirt on the top edge or back of the paper.

Print example	Causes	Check procedures/corrective measures
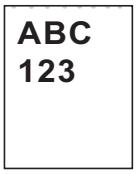	Toner contamination in various parts.	Dirty edges and back of the paper can be caused by toner accumulated on such parts as the paper chute guide, paper conveying paths, the bottom of the drum and developing unit, and the fuser unit inlet. Clean these areas and parts to remove toner.
	Defective transfer roller.	If the transfer roller is contaminated with toner, clean the transfer roller using a vacuum cleaner or by continuously printing a low density page until the symptom has faded away.

(10) Undulated printing at the right edge (scanning start position).

Print example	Causes	Check procedures/corrective measures
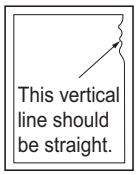	Defective polygon motor (laser scanner unit).	Replace the laser scanner unit (See page 1-5-17).
	Defective control PWB.	Replace the control PWB (See page 1-5-39).

1-4-4 Electric problems

Problem	Causes	Check procedures/corrective measures
(1)The machine does not operate when the main power switch is turned on.	No electricity at the power outlet.	Measure the input voltage.
	The power cord is not plugged in properly.	Check the contact between the power plug and the outlet.
	The top cover is not closed completely.	Check the top cover.
	Broken power cord.	Check for continuity. If none, replace the cord.
	Defective main power switch.	Check for continuity across the contacts. If none, replace the power source PWB (See page 1-5-42).
	Blown fuse in the power source PWB.	Check for continuity. If none, remove the cause of blowing and replace the power source PWB (See page 1-5-42).
	Defective interlock switch.	Check for continuity across the contacts of interlock switch. If none, replace the power source PWB (See page 1-5-42).
	Defective power source PWB.	Replace the power source PWB (See page 1-5-42).
	Defective control PWB.	Replace the control PWB (See page 1-5-39).
(2)Right cooling fan motor does not operate.	Broken right cooling fan motor coil.	Check for continuity across the coil. If none, replace the right cooling fan motor.
	Defective harness between right cooling fan motor and control PWB (YC27), or improper connector insertion.	Reinsert the connector. Also check for continuity within the connector harness. If none, remedy or replace the harness.
	Defective control PWB.	Replace the control PWB (See page 1-5-39).
(3)Left cooling fan motor does not operate.	Broken left cooling fan motor coil.	Check for continuity across the coil. If none, replace the left cooling fan motor.
	Defective harness between left cooling fan motor and control PWB (YC104), or improper connector insertion.	Reinsert the connector. Also check for continuity within the connector harness. If none, remedy or replace the harness.
	Defective control PWB.	Replace the control PWB (See page 1-5-39).
(4)Power source fan motor does not operate.	Broken power source fan motor coil.	Check for continuity across the coil. If none, replace the power source fan motor.
	Defective harness between power source fan motor and control PWB (YC107), or improper connector insertion.	Reinsert the connector. Also check for continuity within the connector harness. If none, remedy or replace the harness.
	Defective control PWB.	Replace the control PWB (See page 1-5-39).
(5)Registration clutch does not operate.	Broken registration clutch coil.	Check for continuity across the coil. If none, replace the registration clutch.
	Defective harness between registration clutch and control PWB (YC20), or improper connector insertion.	Reinsert the connector. Also check for continuity within the connector harness. If none, remedy or replace the harness.
	Defective control PWB.	Replace the control PWB (See page 1-5-39).

Problem	Causes	Check procedures/corrective measures
(6)Paper feed clutch does not operate.	Broken paper feed clutch coil.	Check for continuity across the coil. If none, replace the paper feed clutch.
	Defective harness between paper feed clutch and control PWB (YC20), or improper connector insertion.	Reinsert the connector. Also check for continuity within the connector harness. If none, remedy or replace the harness.
	Defective control PWB.	Replace the control PWB (See page 1-5-39).
(7)Developing clutch does not operate.	Broken developing clutch coil.	Check for continuity across the coil. If none, replace the developing clutch.
	Defective harness between developing clutch and control PWB (YC20), or improper connector insertion.	Reinsert the connector. Also check for continuity within the connector harness. If none, remedy or replace the harness.
	Defective control PWB.	Replace the control PWB (See page 1-5-39).
(8)MP paper feed solenoid does not operate.	Broken MP paper feed solenoid coil.	Check for continuity across the coil. If none, replace the MP paper feed solenoid.
	Defective harness between MP paper feed solenoid and control PWB (YC21), or improper connector insertion.	Reinsert the connector. Also check for continuity within the connector harness. If none, remedy or replace the harness.
	Defective control PWB.	Replace the control PWB (See page 1-5-39).
(9)Duplex solenoid does not operate.	Broken duplex solenoid coil.	Check for continuity across the coil. If none, replace the duplex solenoid.
	Defective harness between duplex solenoid and control PWB (YC29), or improper connector insertion.	Reinsert the connector. Also check for continuity within the connector harness. If none, remedy or replace the harness.
	Defective control PWB.	Replace the control PWB (See page 1-5-39).
(10)Eraser lamp does not turn on.	Defective harness between eraser lamp (YC701) and control PWB (YC28), or improper connector insertion.	Reinsert the connector. Also check for continuity within the connector harness. If none, remedy or replace the harness.
	Defective eraser lamp (PWB).	Replace the eraser lamp (PWB).
	Defective control PWB.	Replace the control PWB (See page 1-5-39).
(11)Paper indicator is flashing when paper is present in the cassette.	Defective paper sensor.	Replace the paper sensor.
	Defective harness between paper sensor and control PWB (YC18), or improper connector insertion.	Reinsert the connector. Also check for continuity within the connector harness. If none, remedy or replace the harness.

Problem	Causes	Check procedures/corrective measures
(12)A paper jam in the paper feed/conveying section or fuser section is indicated when the main power switch is turned on.	A piece of paper torn from paper is caught around registration sensor or exit sensor.	Check and remove if any.
	Defective registration sensor on the high voltage PWB.	Replace the high voltage PWB (See page 1-5-45).
	Defective exit sensor.	Replace the exit sensor.
(13)Attention indicator is lit when the front cover is closed.	Defective interlock switch on the power source PWB.	Check for continuity across the interlock switch. If there is no continuity when the interlock switch is on, replace the power source PWB (See page 1-5-42).

1-4-5 Mechanical problems

Problem	Causes/check procedures	Corrective measures
(1)No primary paper feed.	Check if the surfaces of the paper feed roller is dirty with paper powder.	Clean with isopropyl alcohol.
	Check if the paper feed roller is deformed.	Check visually and replace any deformed paper feed roller (assembly) (See page 1-5-6).
	Defective paper feed clutch installation.	Check visually and remedy if necessary.
(2)No secondary paper feed.	Check if the surfaces of the upper and lower registration rollers are dirty with paper powder.	Clean with isopropyl alcohol.
	Defective registration clutch installation.	Check visually and remedy if necessary.
(3)Skewed paper feed.	Paper width guide in a cassette installed incorrectly.	Check the paper width guide visually and correct or replace if necessary.
(4)Multiple sheets of paper are fed at one time.	Check if the separator pad or MPF separation pad is worn.	Replace the separator pad if it is worn.
	Check if the paper is curled.	Replace the paper.
(5)Paper jams.	Check if the paper is excessively curled.	Replace the paper.
	Check if the contact between the upper and lower registration rollers is correct.	Check visually and remedy if necessary.
	Check if the heat roller or press roller is extremely dirty or deformed.	Replace the fuser unit (See page 1-5-34).
	Check if the contact between the ejection roller and fuser ejection pulley is correct.	Check visually and remedy if necessary.
(6)Toner drops on the paper conveying path.	Check if the drum unit or developing unit is extremely dirty.	Clean the drum unit or developing unit (See page 1-5-30 or 1-5-29).
(7)Abnormal noise is heard.	Check if the pulleys, rollers and gears operate smoothly.	Grease the bearings and gears.
	Check if the following electromagnetic clutches are installed correctly: Paper feed clutch, registration clutch and developing clutch.	Check visually and remedy if necessary.

1-5-1 Precautions for assembly and disassembly

(1) Precautions

Before starting disassembly, press the Power key on the operation panel to off. Make sure that the Power lamp is off before turning off the main power switch. And then unplug the power cable from the wall outlet.
When the fax kit is installed, be sure to disconnect the modular code before starting disassembly.
When handling PWBs (printed wiring boards), do not touch parts with bare hands.
The PWBs are susceptible to static charge.
Do not touch any PWB containing ICs with bare hands or any object prone to static charge.
When removing the hook of the connector, be sure to release the hook.
Take care not to get the cables caught.
To reassemble the parts, use the original screws. If the types and the sizes of screws are not known, refer to the PARTS LIST.

(2) Drum

Note the following when handling or storing the drum.
When removing the drum unit, never expose the drum surface to strong direct light.
Keep the drum at an ambient temperature between -20°C/-4°F and 40°C/104°F and at a relative humidity not higher than 90% RH. Avoid abrupt changes in temperature and humidity.
Avoid exposure to any substance which is harmful to or may affect the quality of the drum.
Do not touch the drum surface with any object. Should it be touched by hands or stained with oil, clean it.

(3) Toner

Store the toner container in a cool, dark place.
Avoid direct light and high humidity.

(4) How to tell a genuine Kyocera Mita toner container

As a means of brand protection, the Kyocera Mita toner container utilizes an optical security technology to enable visual validation. A validation viewer is required to accomplish this.

Hold the validation viewer over the left side part of the brand protection seal on the toner container. Through each window of the validation viewer, the left side part of the seal should be seen as follows:

A black-colored band when seen through the left side window (●)

A shiny or gold-colored band when seen through the right side window (☼)

The above will reveal that the toner container is a genuine Kyocera Mita branded toner container, otherwise, it is a counterfeit.

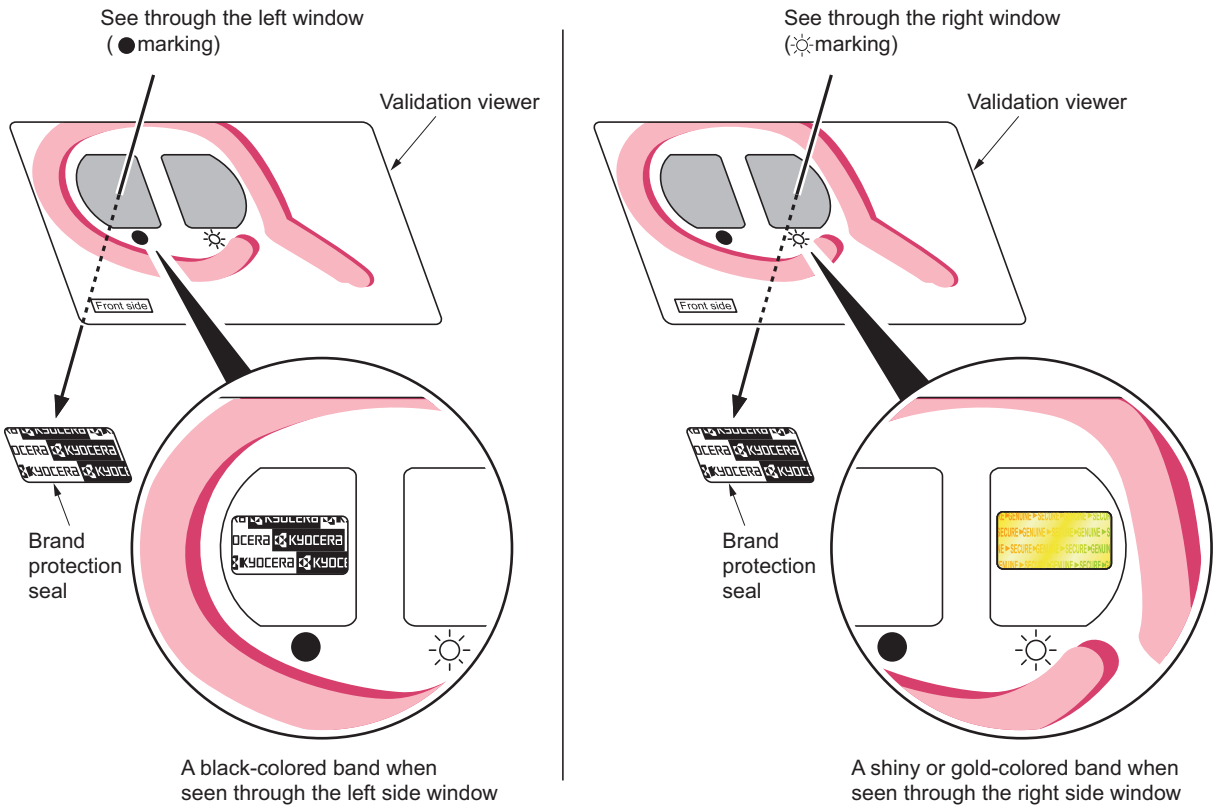

Figure 1-5-1

The brand protection seal has an incision as shown below to prohibit reuse.

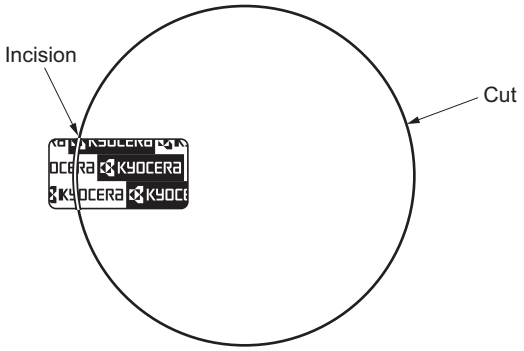

Figure 1-5-2

1-5-2 Outer covers

(1) Detaching and refitting the left cover and right cover

Procedure

1. Remove the screw.
2. Unhook four hooks and then remove the rear upper cover.

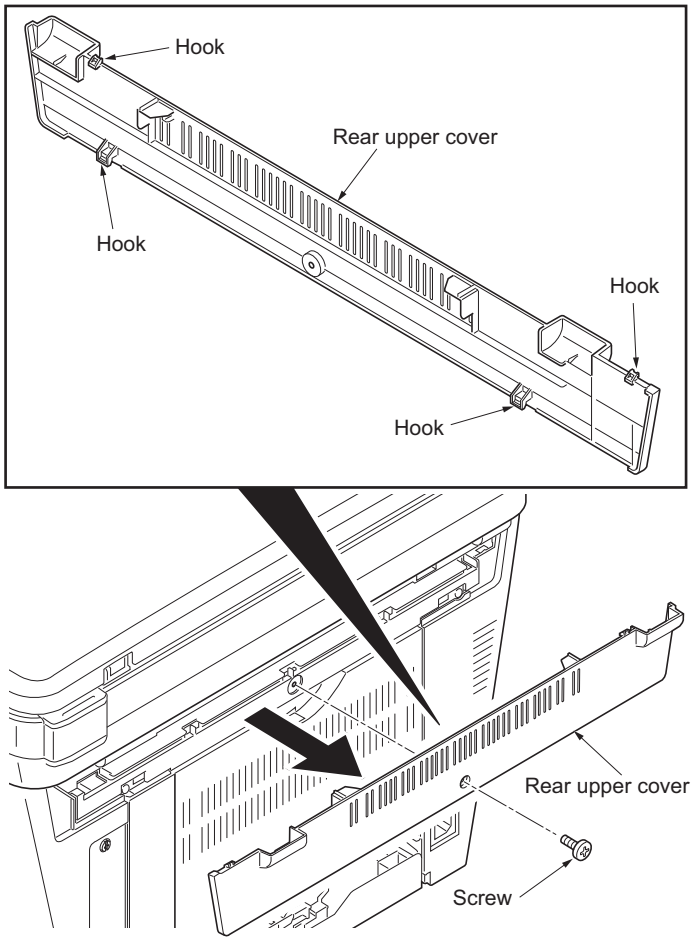

Figure 1-5-3

3. Remove the cassette (See page 1-5-6).
4. Open the front cover.
5. Unhook the hook and then remove the controller box cover.

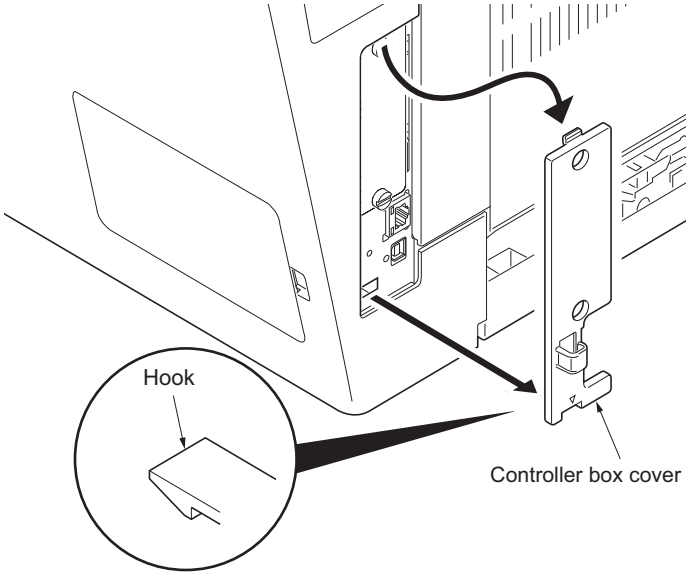

Figure 1-5-4

6. Unhook seven hooks and then remove the right cover.

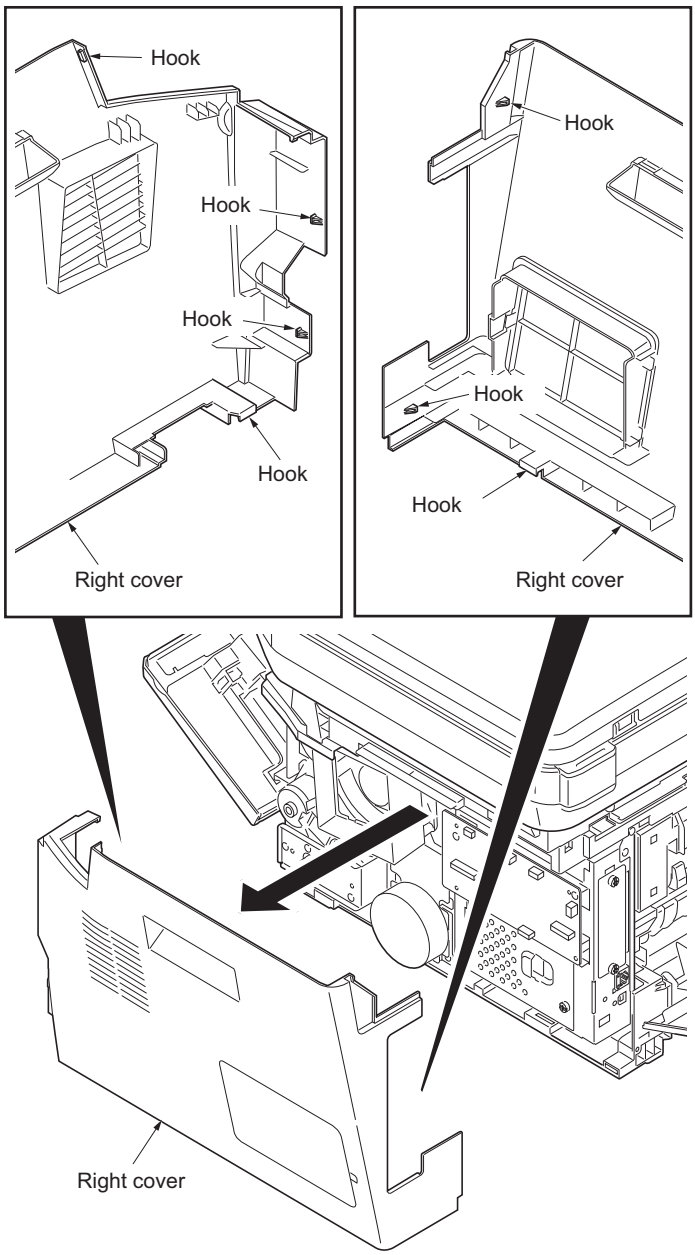

Figure 1-5-5

7. Unhook six hooks and then remove the left cover.

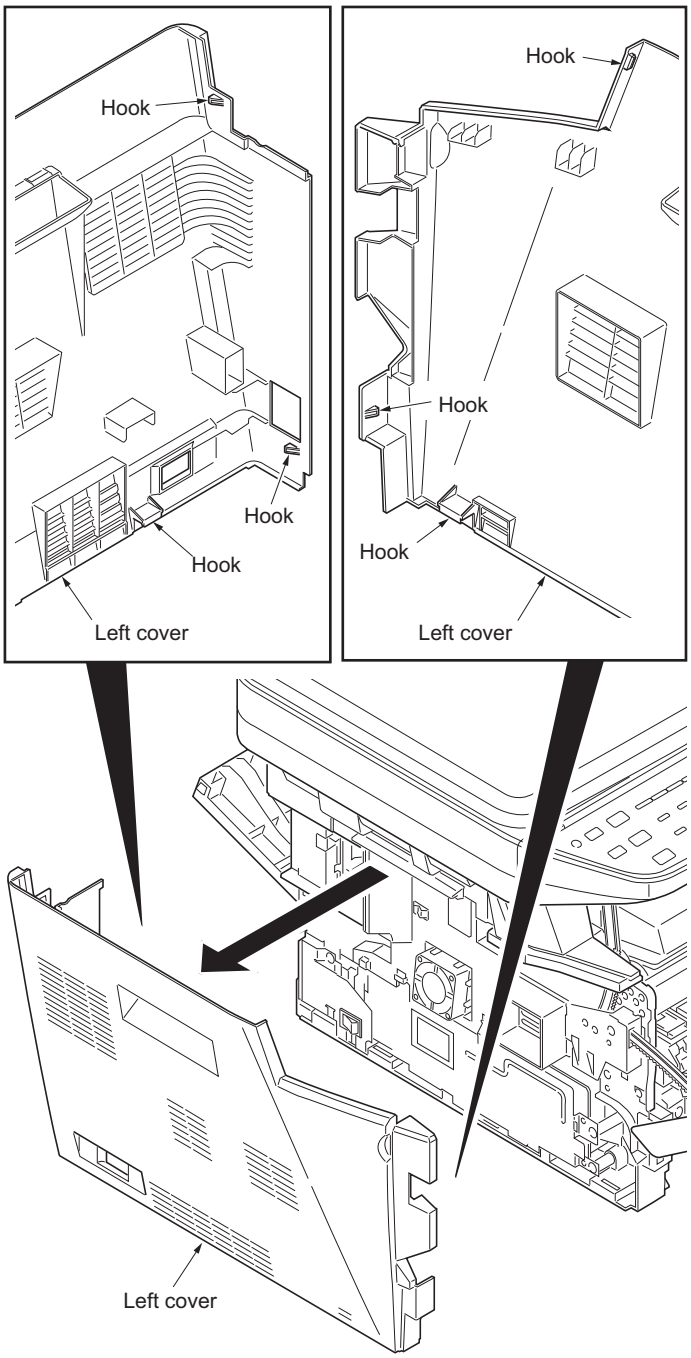

Figure 1-5-6

1-5-3 Paper feed section

(1) Detaching and refitting the paper feed assembly (paper feed roller and pickup roller)

Procedure

1. Remove the cassette.

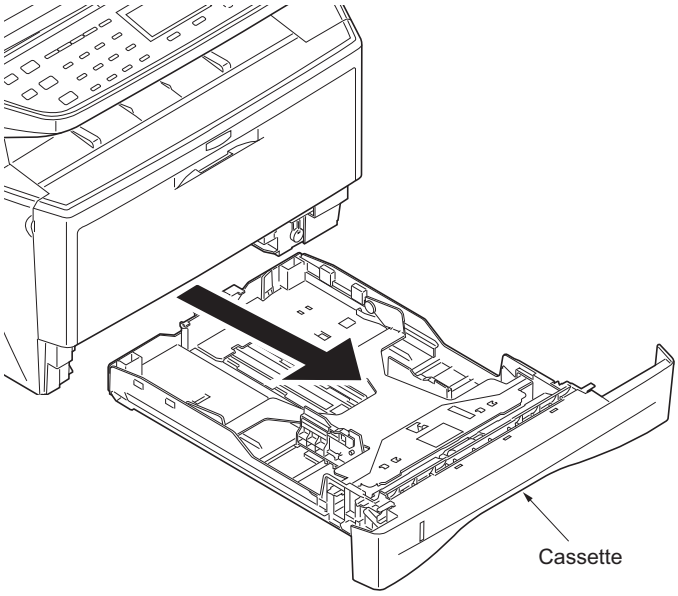

Figure 1-5-7

2. Slide the feed shaft.
3. While pressing the lever and then remove the paper feed roller assembly.

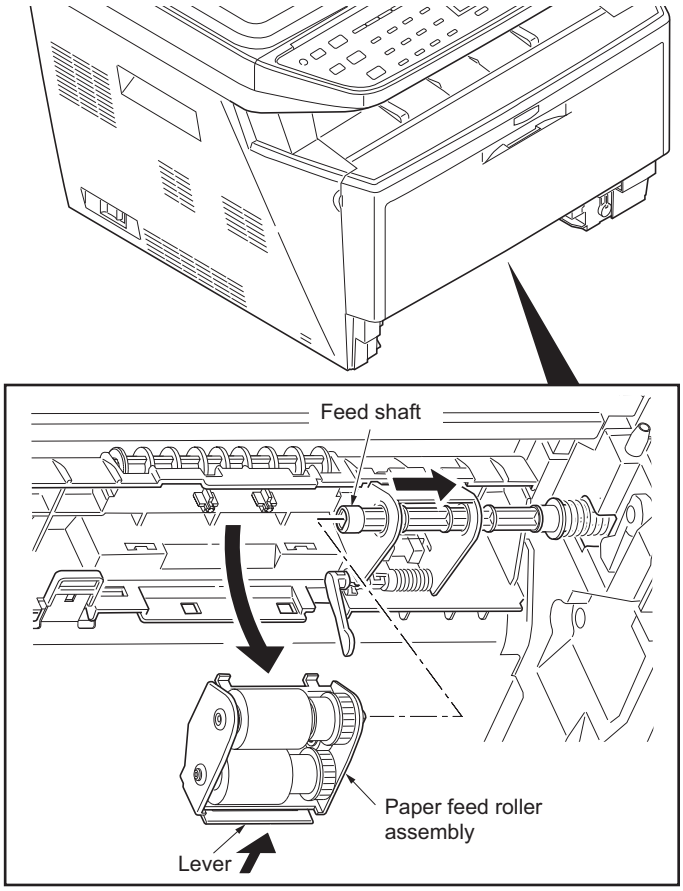

Figure 1-5-8

4. Check or replace the paper feed assembly and refit all the removed parts.

   When refitting the paper feed roller assembly, be sure to align the paper feed roller pivot with the slotted hole on the feed shaft.

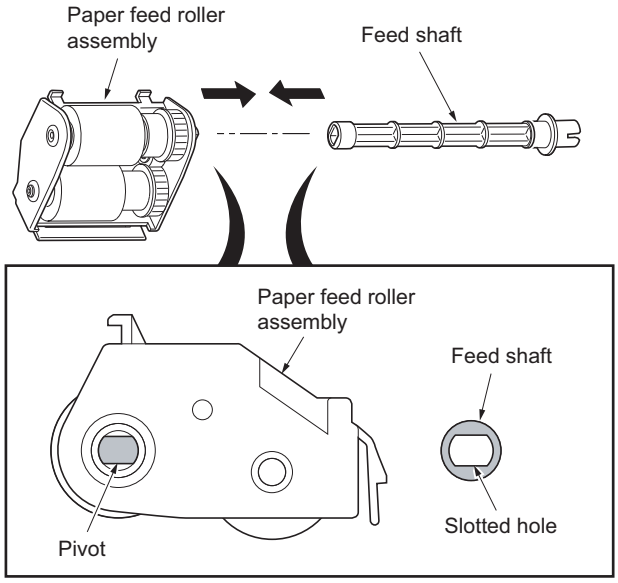

Figure 1-5-9

(2) Detaching and refitting the retard roller assembly

Procedure

1. Remove the cassette (See page 1-5-6).
2. Push the bottom plate down until it locks.
3. Unhook two hooks and then remove the retard guide.

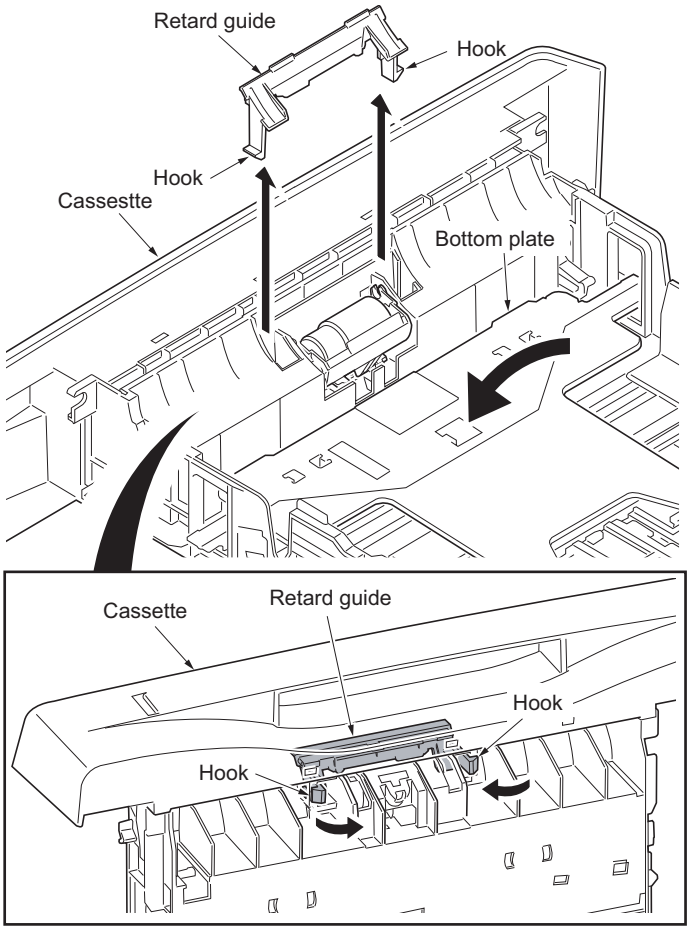

Figure 1-5-10

4. Remove the retard roller assembly.

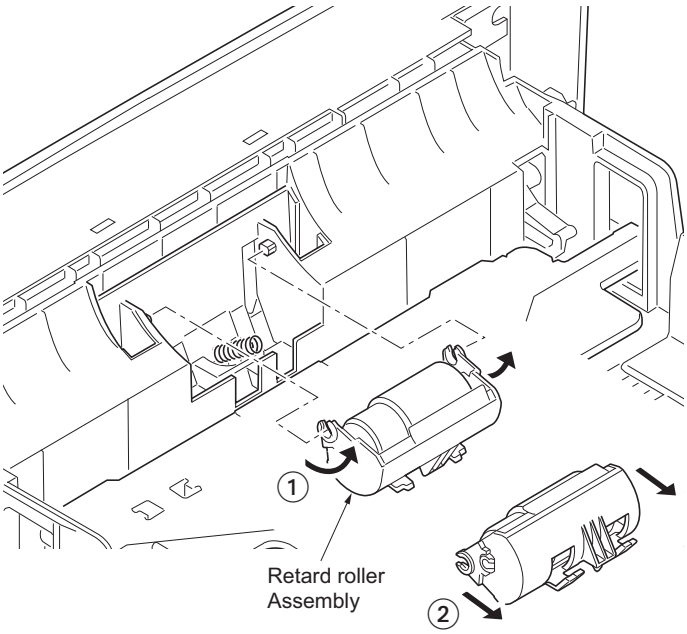

Figure 1-5-11

5. Check or replace the retard roller assembly and refit all the removed parts.

   Caution: Before refitting the retard roller assembly, firmly install the spring onto the projection of the retard roller assembly.

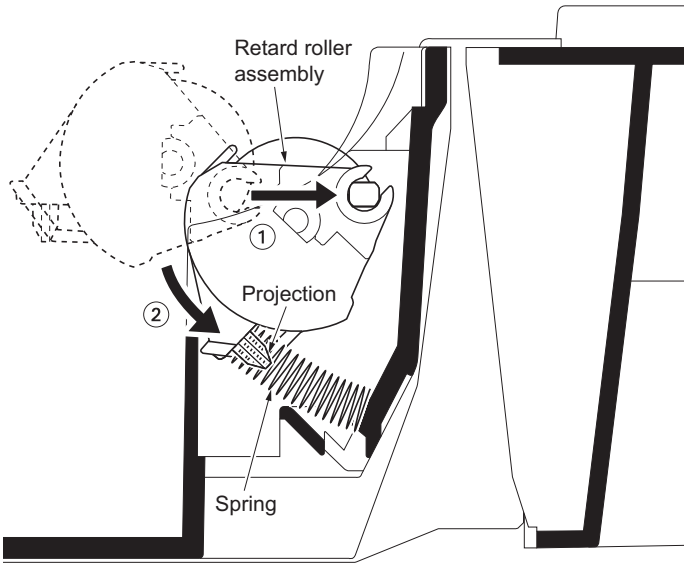

Figure 1-5-12

(3) Detaching and refitting the MP paper feed roller

Procedure

1. Open the front cover.
2. Pull the MP feed holder (lever) down. 1
3. Slide the MP feed holder. 2
4. Remove the MP paper feed roller. 3

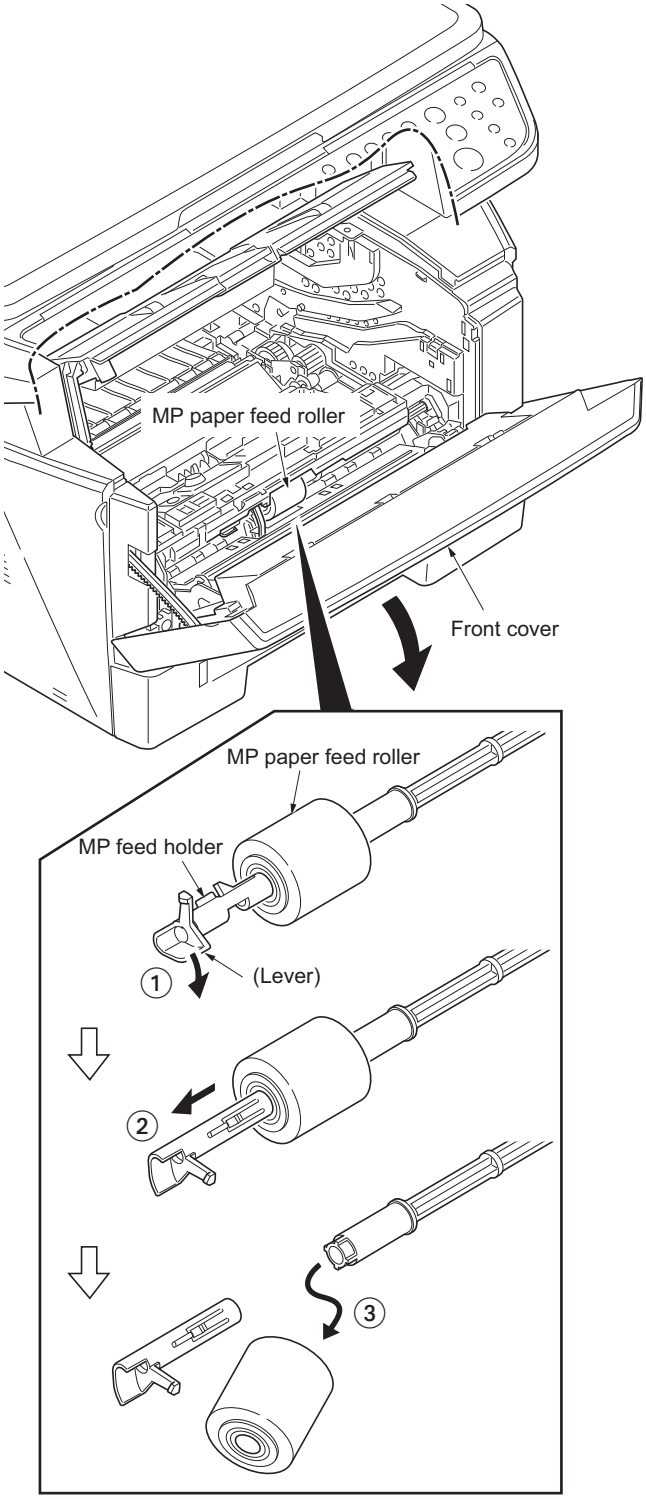

Figure 1-5-13

5. Check or replace the MP paper feed roller and refit all the removed parts.

   When refitting the MP paper feed roller, be sure to align the paper feed roller pivot with the slotted hole on the MPF feed shaft.
   When refitting the MP paper feed roller, be sure to align the MPF feed shaft pivot with the slotted hole on the MP paper feed roller.

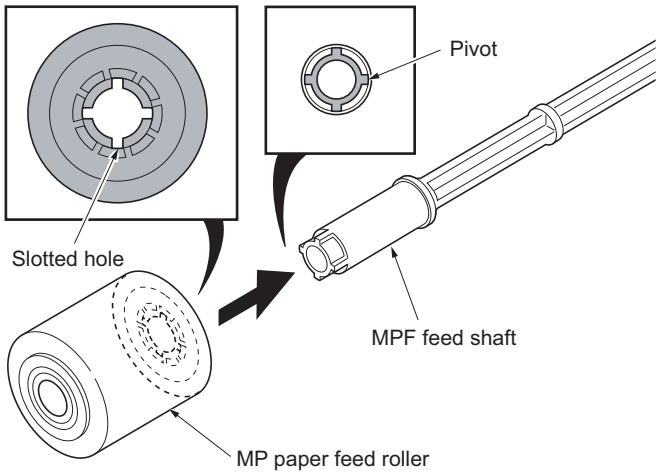

Figure 1-5-14

(4) Note on removing and Installing the upper registration roller and lower registration roller

When reinstalling the upper registration roller or lower registration roller, be sure to use a new registration L spring and registration R spring. Otherwise, paper feeding may be deteriorated due to the spring hooks possibly being distorted during the spring is unhooked.

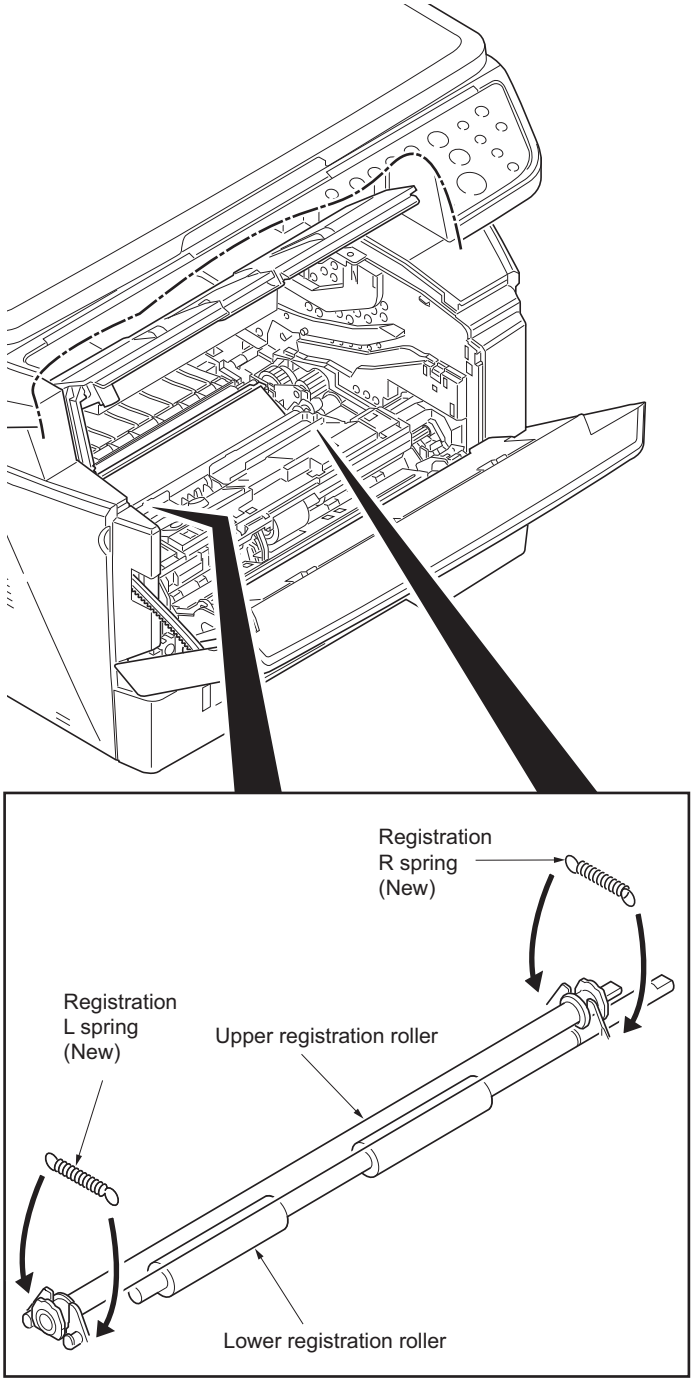

Figure 1-5-15

1-5-4 Optical section

(1) Detaching and refitting the original cover

Procedure

1. Pull the original cover out.

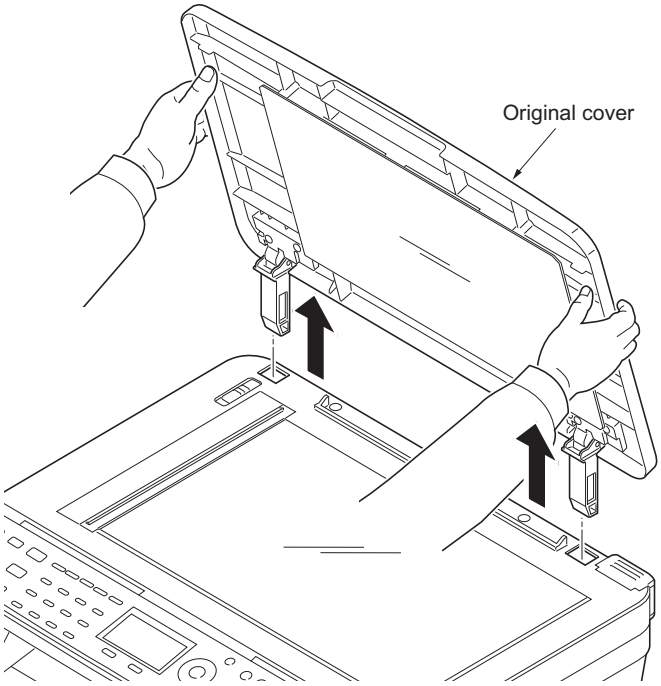

Figure 1-5-16

(2) Detaching and refitting the scanner unit (LSU)

Procedure

1. Remove the original cover (See page 1-5-13).
2. Remove the left cover and right cover (See page 1-5-3).
3. Remove the FFC and connector from the control PWB.
4. Remove three connectors from the scanner PWB.

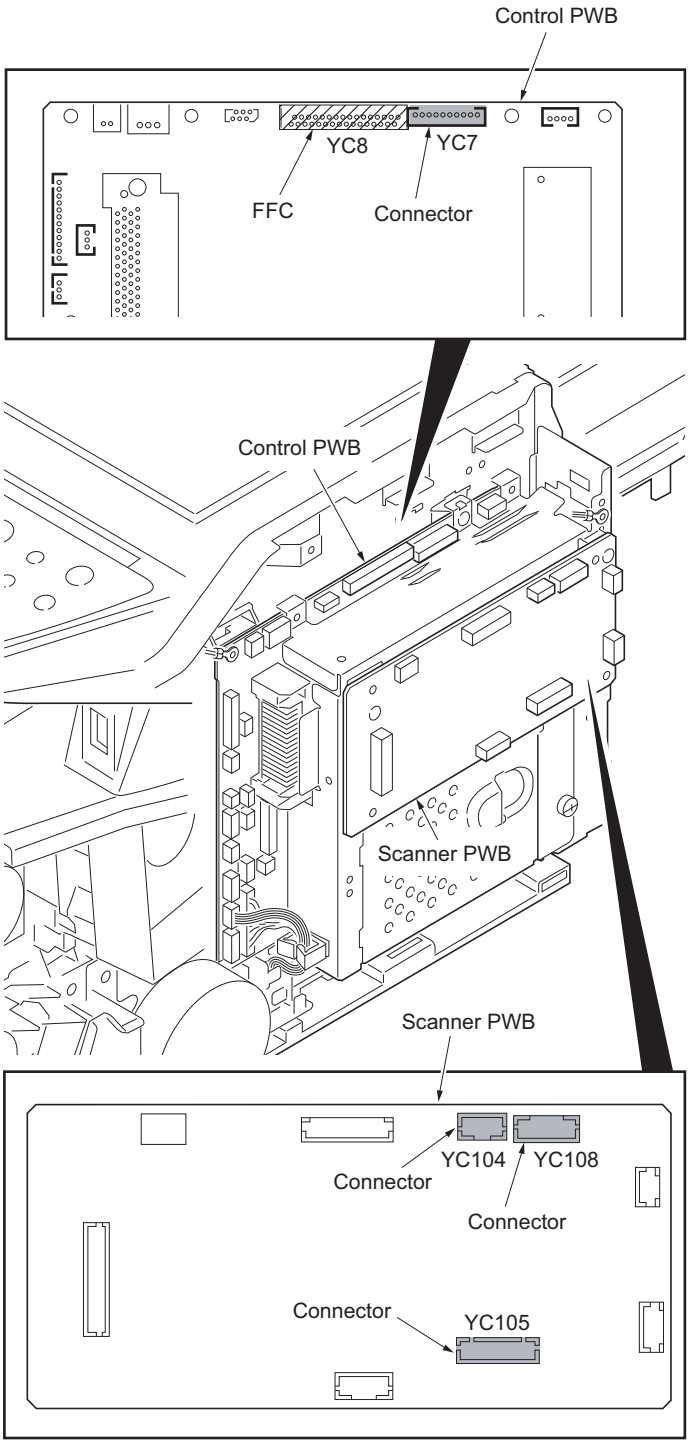

Figure 1-5-17

5. Release three clamps and then remove the wires.

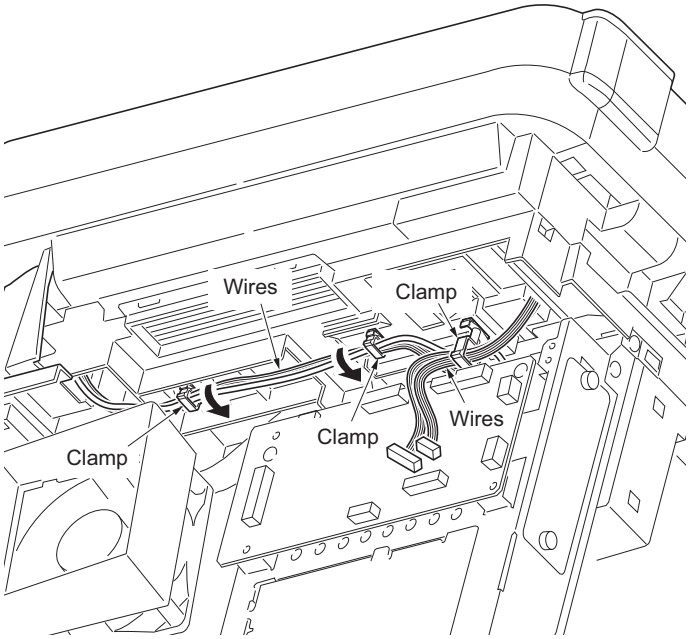

Figure 1-5-18

6. Remove two screws.

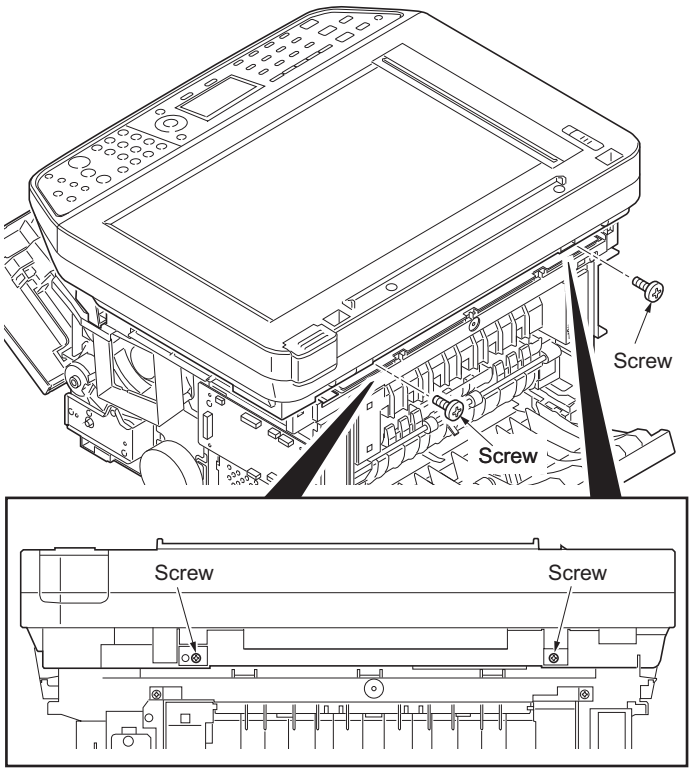

Figure 1-5-19

7. Unhook four hooks and then remove the scanner unit.

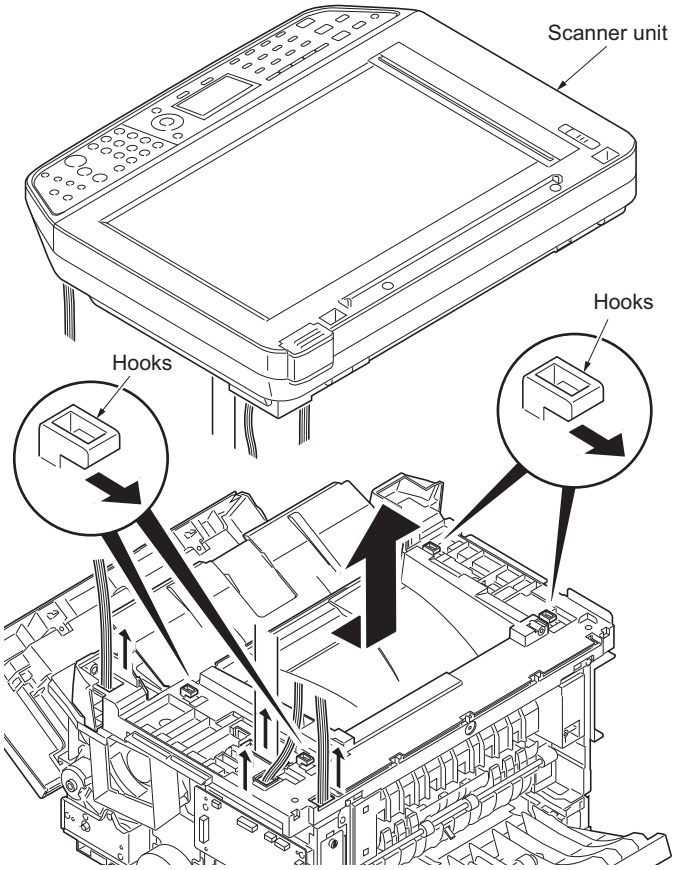

Figure 1-5-20

(3) Detaching and refitting the laser scanner unit (LSU)

Procedure

1. Remove the scanner unit (See page 1-5-14).
2. Remove the screw and then remove the grounding terminal.
3. Remove two connectors from the control PWB.

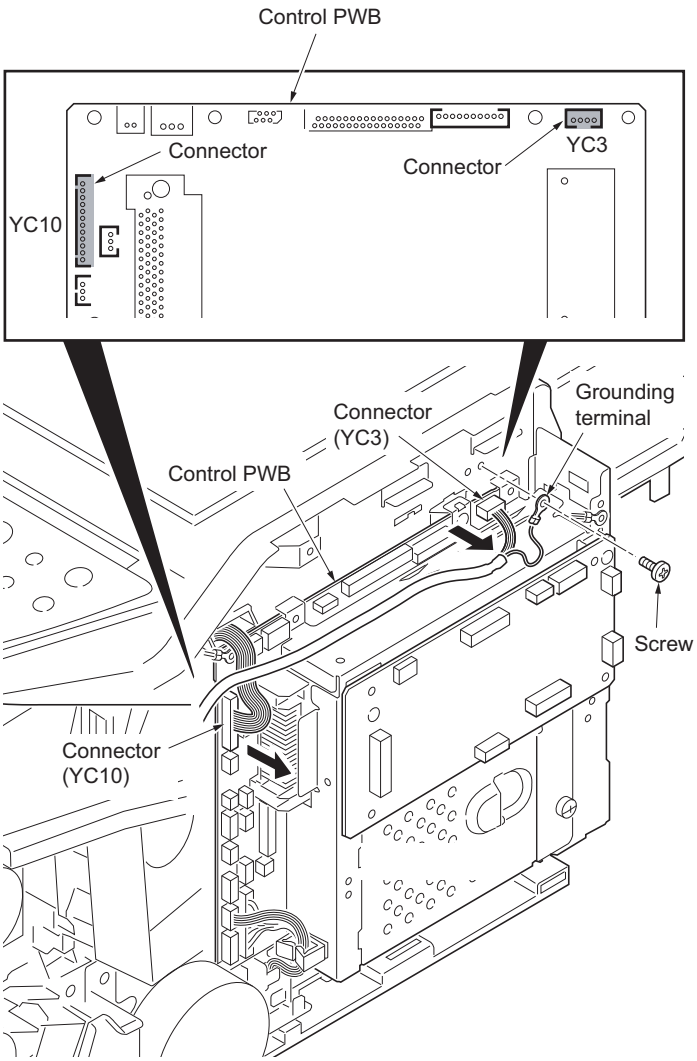

Figure 1-5-21

4. Remove the wires from three clamps.
5. Remove the connector from the power source PWB.

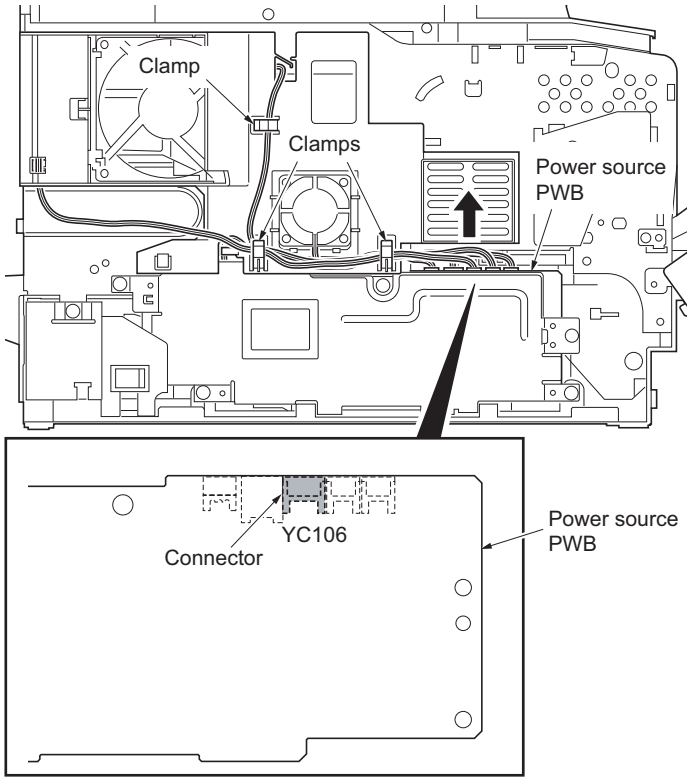

Figure 1-5-22

6. Unhook four hooks and then remove the frame left duct.
7. Remove the wires from the clamp.

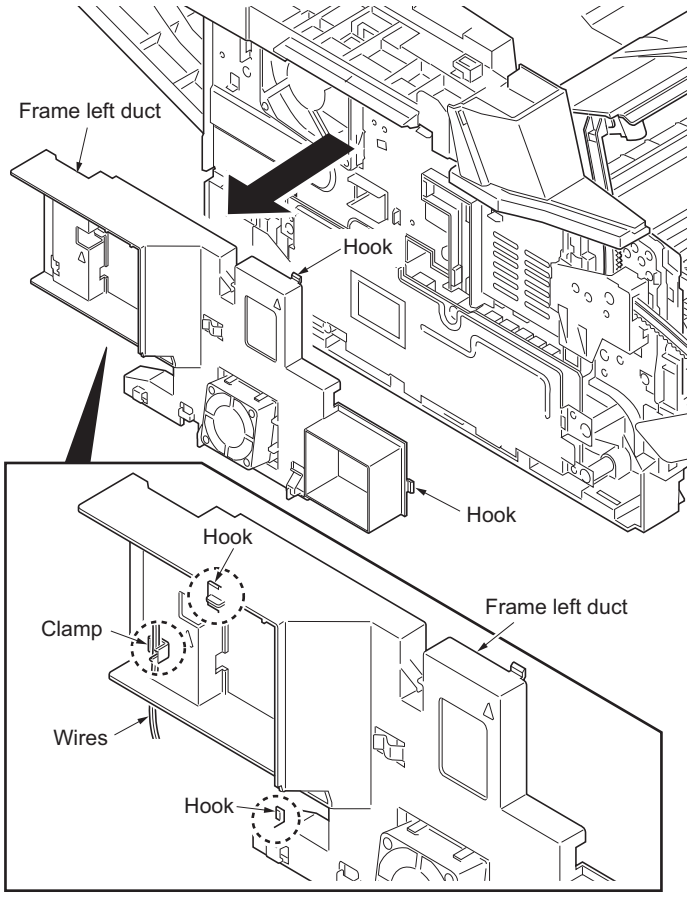

Figure 1-5-23

8. Remove the stopper and then remove the top cover rack-L from the top cover.

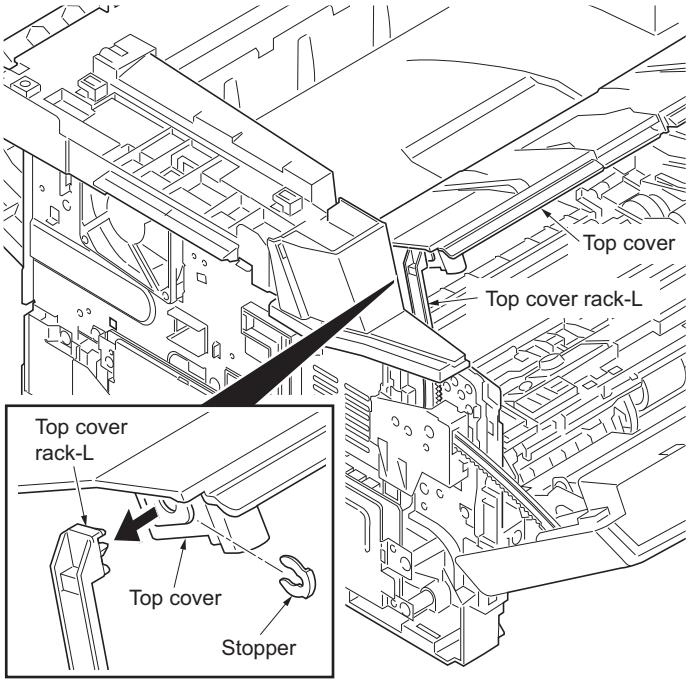

Figure 1-5-24

9. Remove four screws from the top cover.

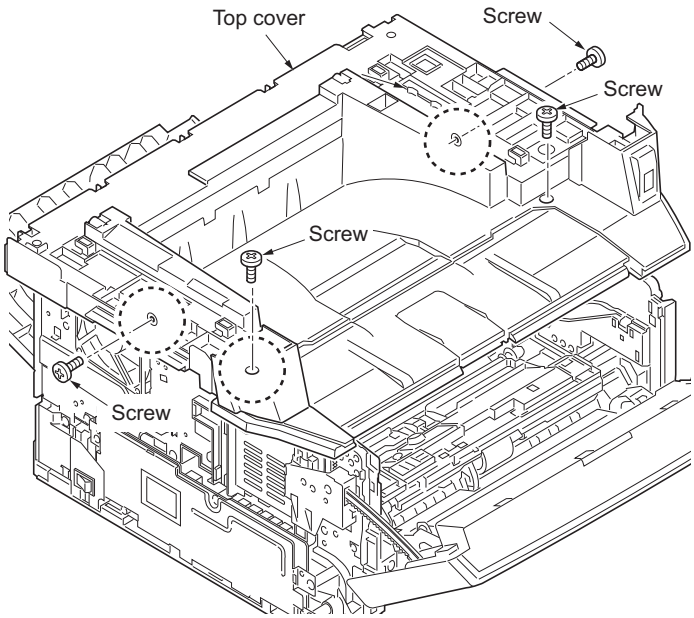

Figure 1-5-25

10. Unhook two hooks and then remove the top cover.
11. Remove the connector.

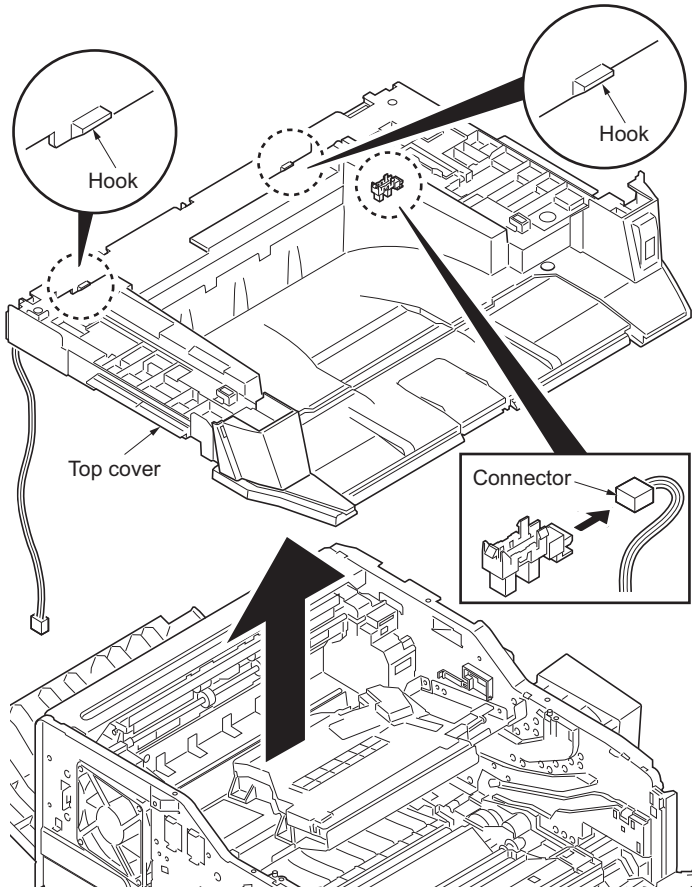

Figure 1-5-26

12. Release the clamp and then pull out the wires.
13. Remove four screws and then remove the laser scanner unit (LSU).
14. Check or replace the laser scanner unit (LSU) and refit all the removed parts.

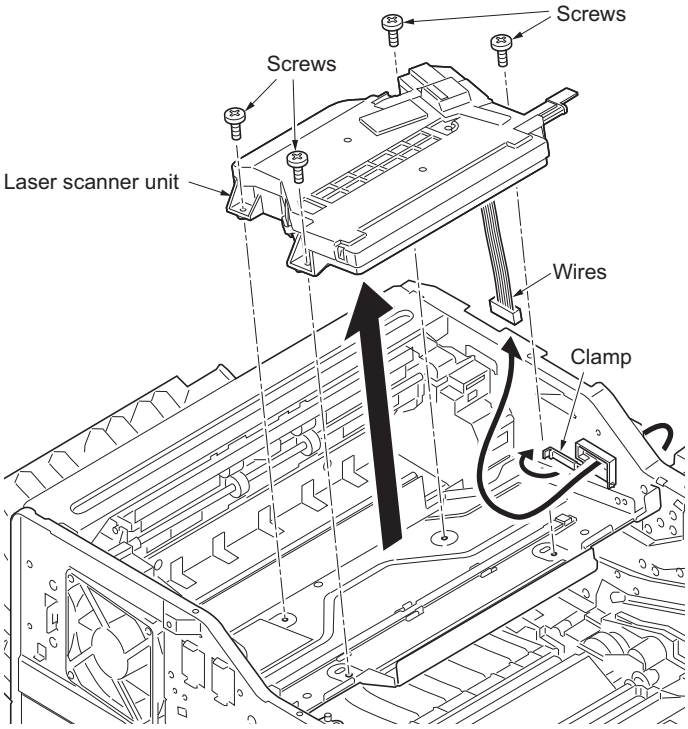

Figure 1-5-27

(4) Replacing the image scanner unit (ISU)

Procedure
Removing the image scanner unit (ISU)

1. Remove the DP (See page 1-5-13).
2. Unhook two hooks by using a flat screw-driver from the pits.
3. Remove the connector and then remove the operation panel.

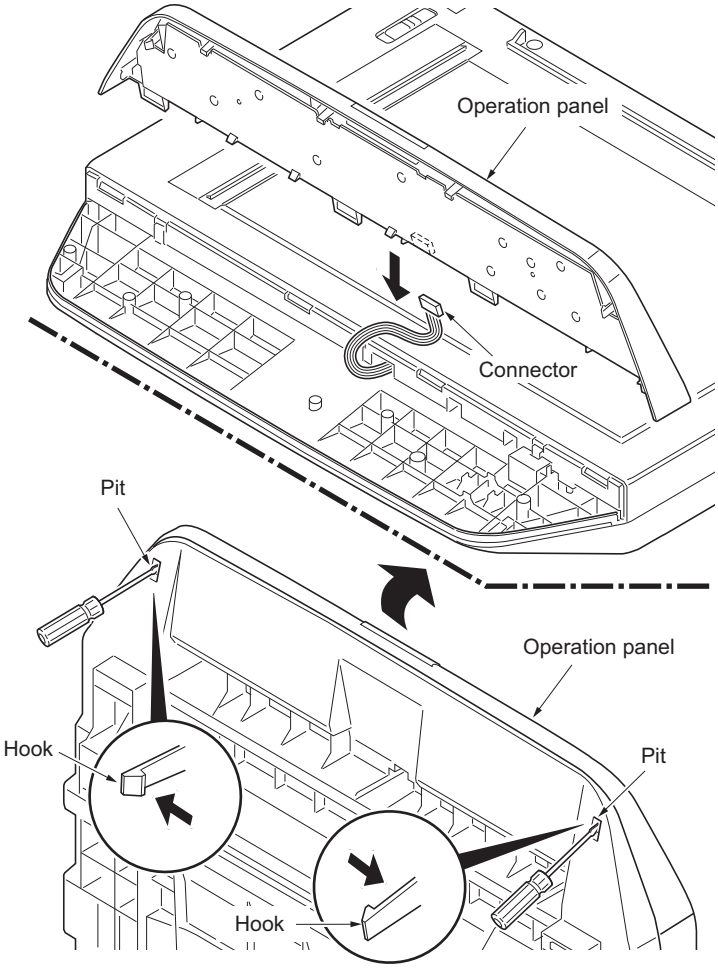

Figure 1-5-28

4. Remove two screws.
5. Unhook three hooks and then remove the ISU upper frame.

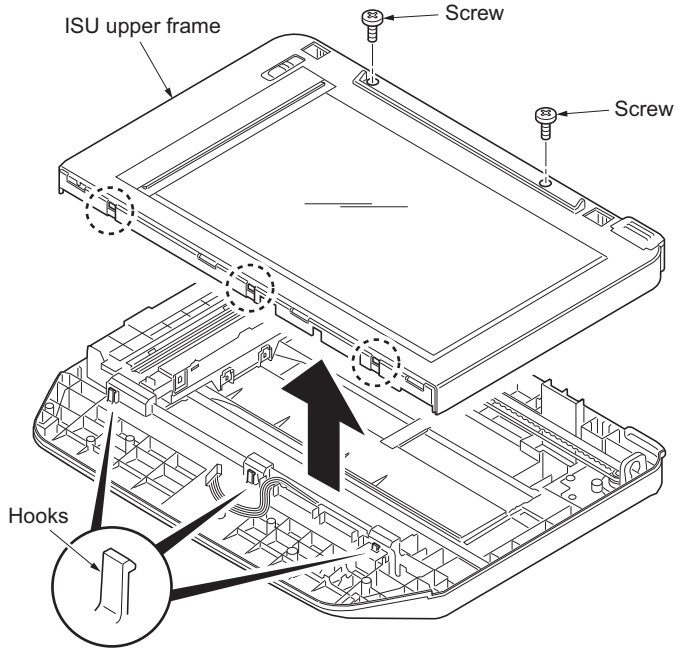

Figure 1-5-29

6. Move the image scanner unit (ISU) in the middle of the ISU shaft.
7. Detach the ISU shaft from the holder by lifting it.
8. Pull the ISU shaft out from the ISU.

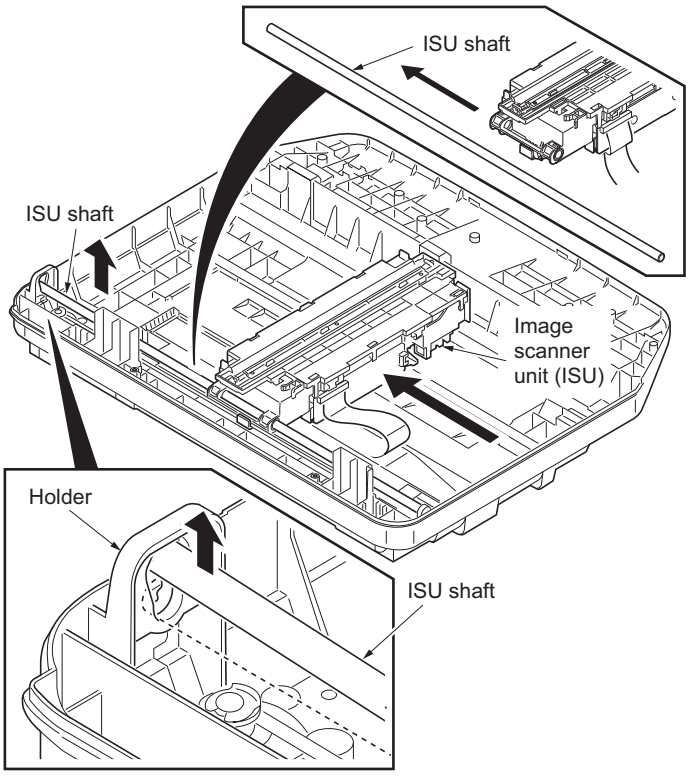

Figure 1-5-30

9. Remove the ISU belt from the tension pulley and ISU gear 63/32.
10. Remove the ISU belt from the hooks of the ISU.

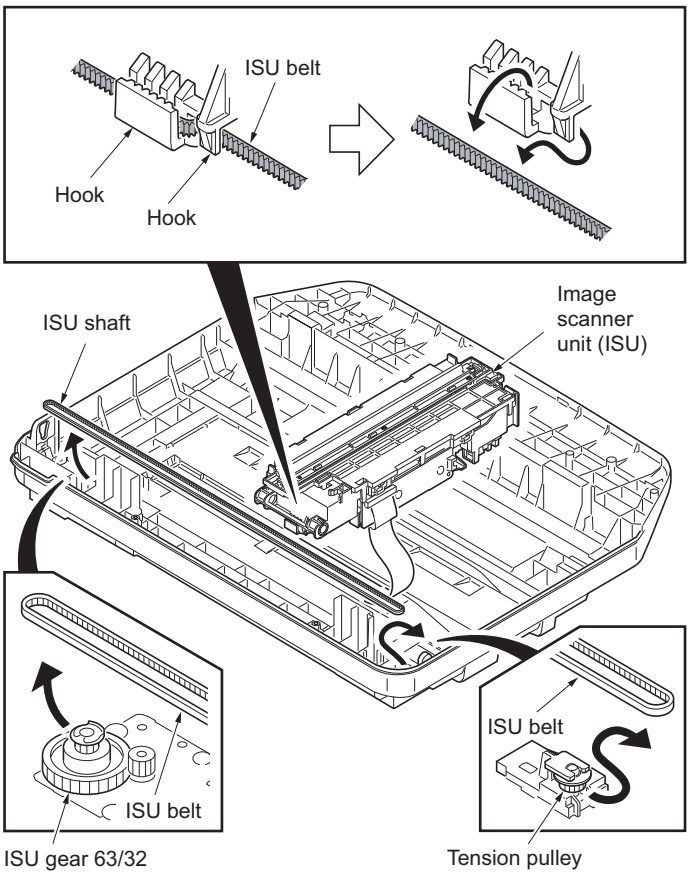

Figure 1-5-31

11. Remove the FFC center stopper.

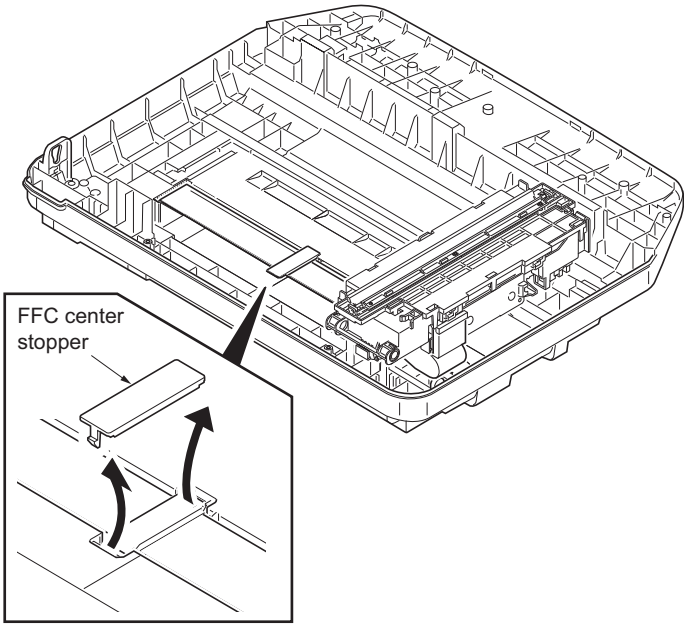

Figure 1-5-32

12. Remove the FFC from the FFC tape D.
13. Remove the ferrite core from the pit.
14. Remove the FFC from the FFC tape A.

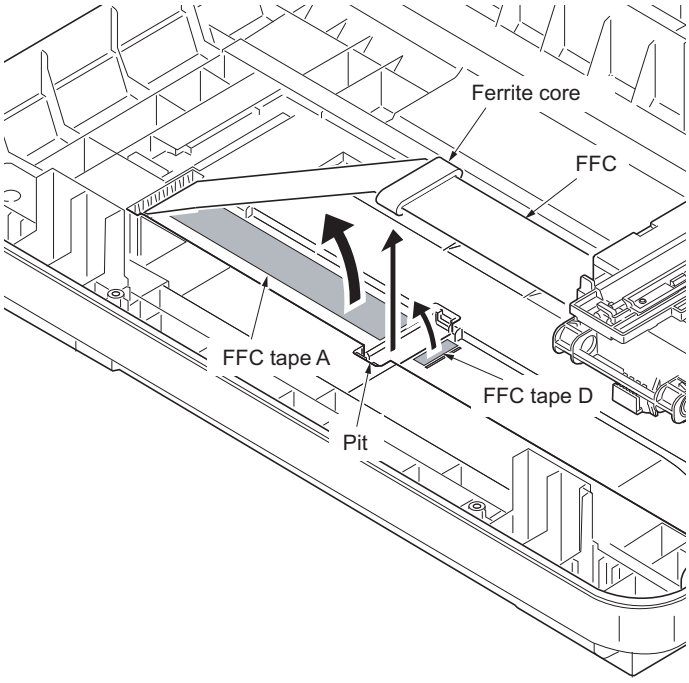

Figure 1-5-33

15. Fold the end of the FFC and then pull the FFC out from the ISU lower frame.
16. Remove the FFC tape D and A from the ISU lower frame.
17. Clean the adhesive residue of the FFC tape D and A.

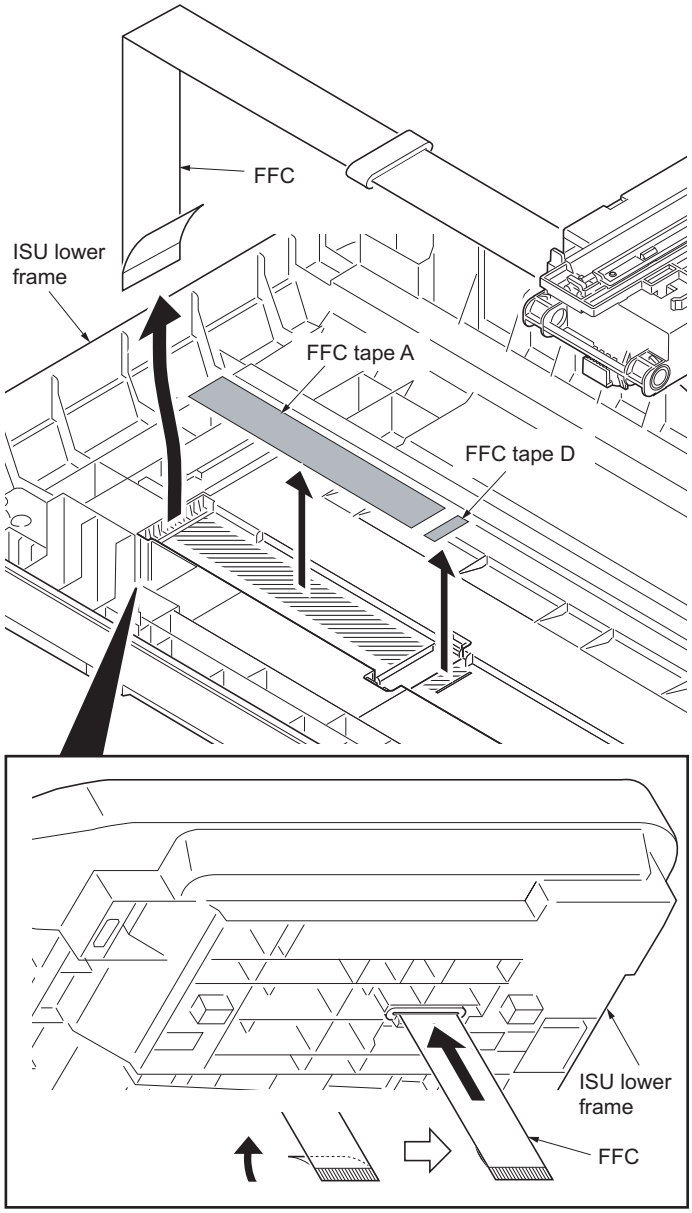

Figure 1-5-34

18. Remove the ferrite core from the FFC.

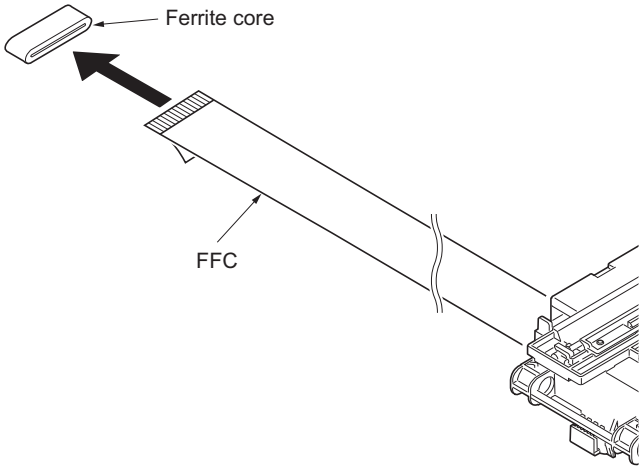

Figure 1-5-35

Installing the image scanner unit (ISU)

19. Peel off the protective seal on one side from the FFC tape D.
20. Stick the FFC tape D on the ISU lower frame, aligned with the marking of the frame.
    (Sticking standards: See right figure)
21. Peel off the protective seal on the other side of the FFC tape A.
22. Stick the FFC tape A on the ISU lower frame.
    (At the right for how to correctly sick the tape in position, see the figure.)

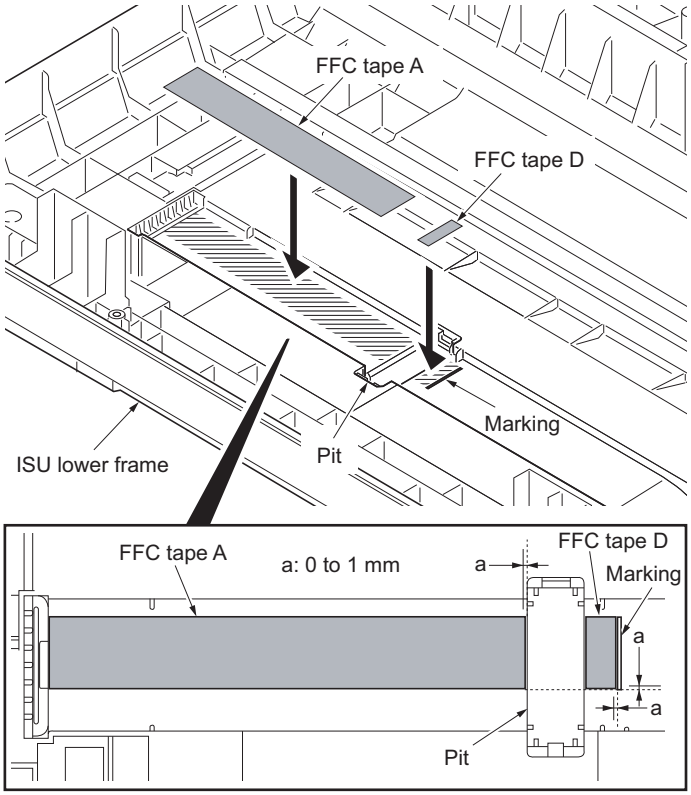

Figure 1-5-36

23. Fix the ferrite core onto the FFC.

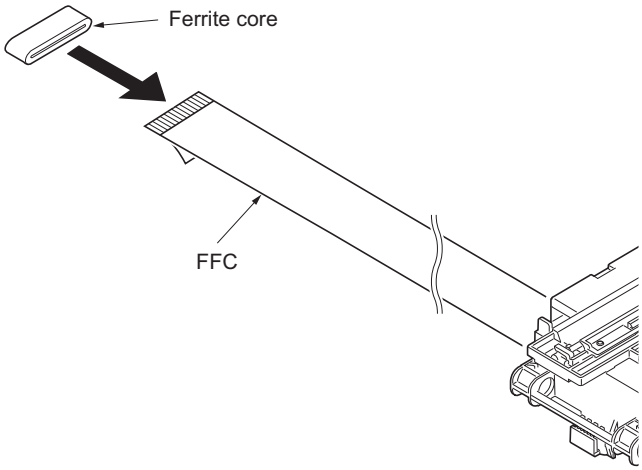

Figure 1-5-37

24. Peel off the protective seal from the FFC tape D.
25. Align the line marking on the FFC with the rib on the ISU lower frame, then fix the FFC to the FFC tape D.
26. Install the ferrite core in the pit.
27. Peel off the released paper from the FFC tape A.
28. Stick the FFC on the FFC tape A.

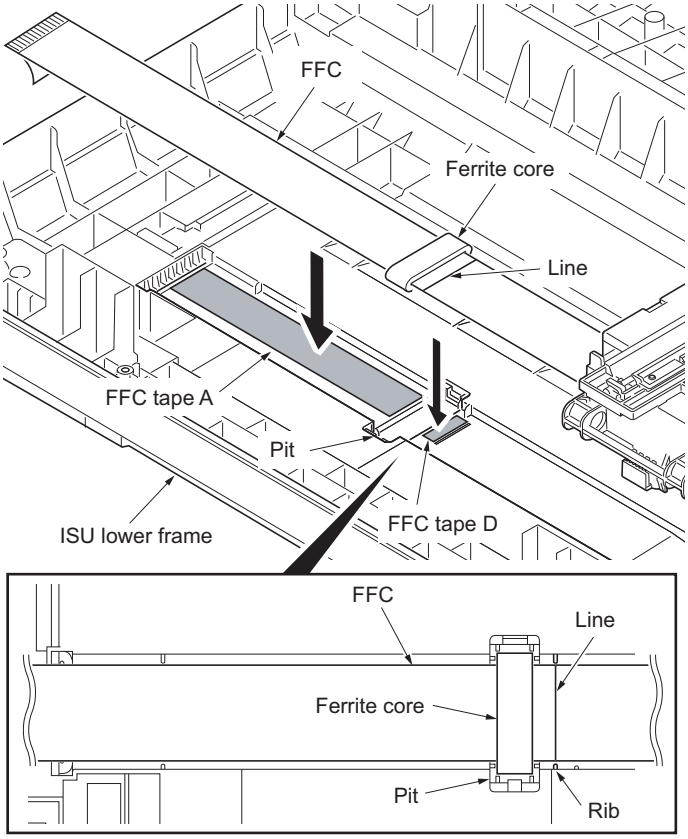

Figure 1-5-38

29. Thread an end of the FFC through the ISU lower frame.
30. Refer to the step 11 to 1 and refit all the removed parts.

NOTE:
When the replacing the image scanner unit (ISU), perform following maintenance modes.

1. U425 Setting the target (see page 1-3-47)
2. U411 Adjusting the scanner automatically (see page 1-3-46)

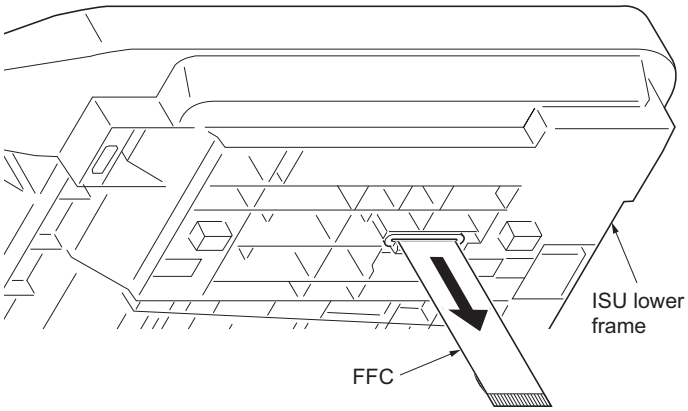

Figure 1-5-39

(5) Detaching and refitting the exposure lamp and inverter PWB

Procedure

1. Remove the original cover (See page 1-5-13).
2. Move the image scanner unit (ISU) unit to the center.
3. Unhook five hooks and then remove the lamp mount.
4. Remove the connector.

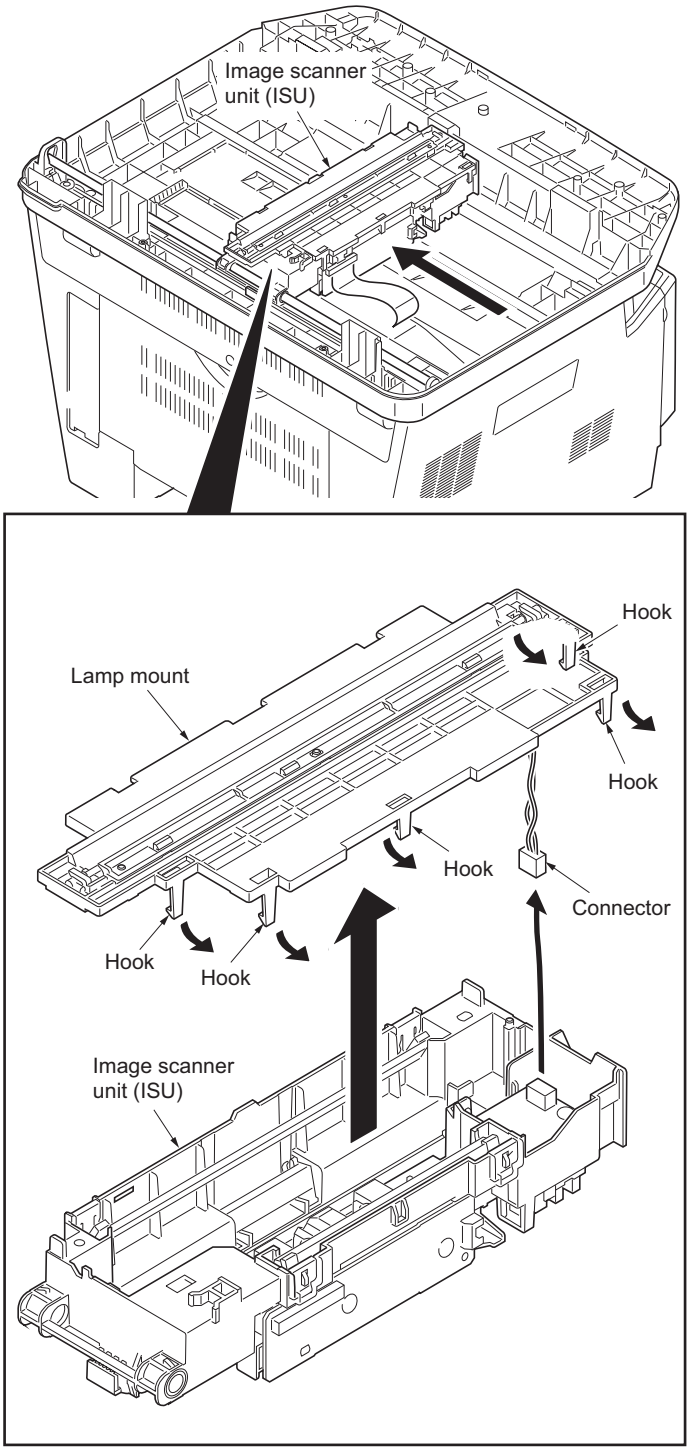

Figure 1-5-40

5. Remove the connector.
6. Remove the screw and then remove the inverter PWB.
7. Check or replace the inverter PWB and refit all the removed parts.

   Caution: Replace F1 with a fuse rated 250 V ac, 0.75 A, non-time delay, (when F1 fuse is replaced.)

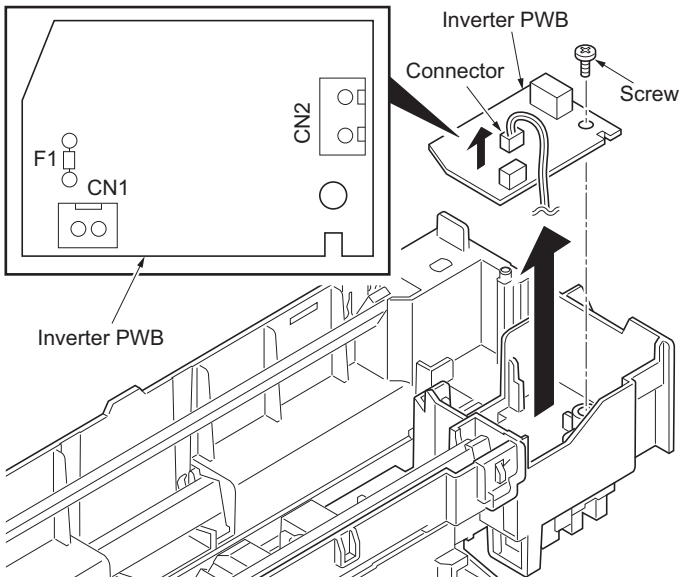

Figure 1-5-41

8. Unhook three hooks and then remove the ISU reflector.

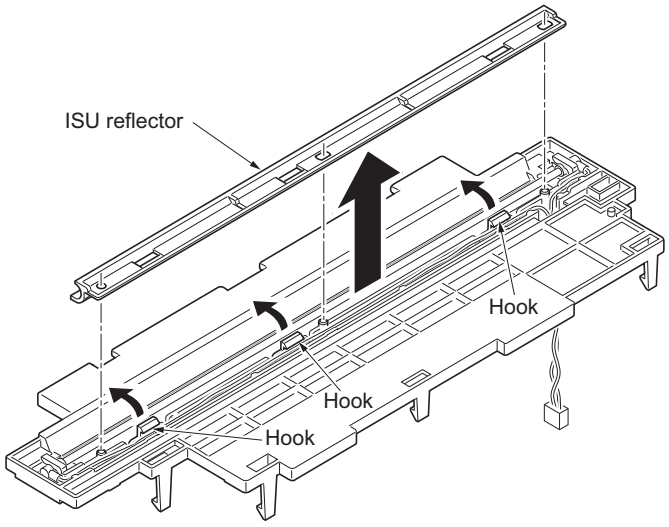

Figure 1-5-42

9. Remove the exposure lamp from the holders.
10. Check or replace the exposure lamp and refit all the removed parts.

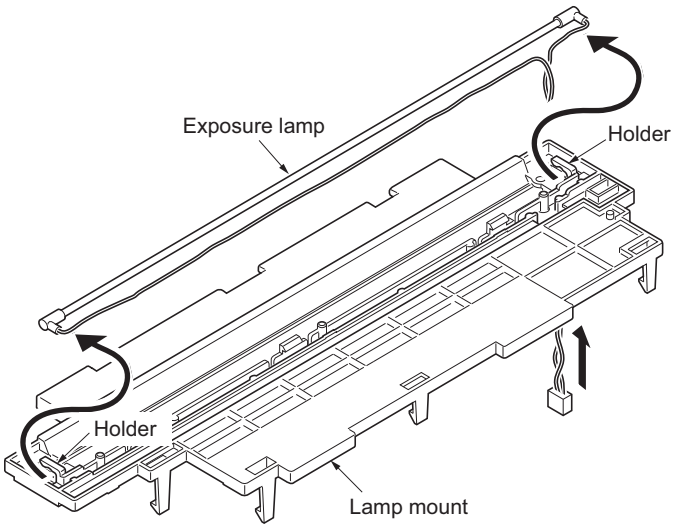

Figure 1-5-43

1-5-5 Developing section

(1) Detaching and refitting the developing unit

Procedure

1. Open the front cover.
2. Remove the developing unit.
3. Check or replace the developing unit and refit all the removed parts.

NOTE:
When the periodic maintenance (replacing the maintenance kit, see page 2-4-4), perform following maintenance modes.

1. U251 clearing the maintenance count (see page 1-3-37)
2. U111 Clearing the drum drive time (see page 1-3-31)
3. U130 Initial setting for the developing unit (see page 1-3-32)

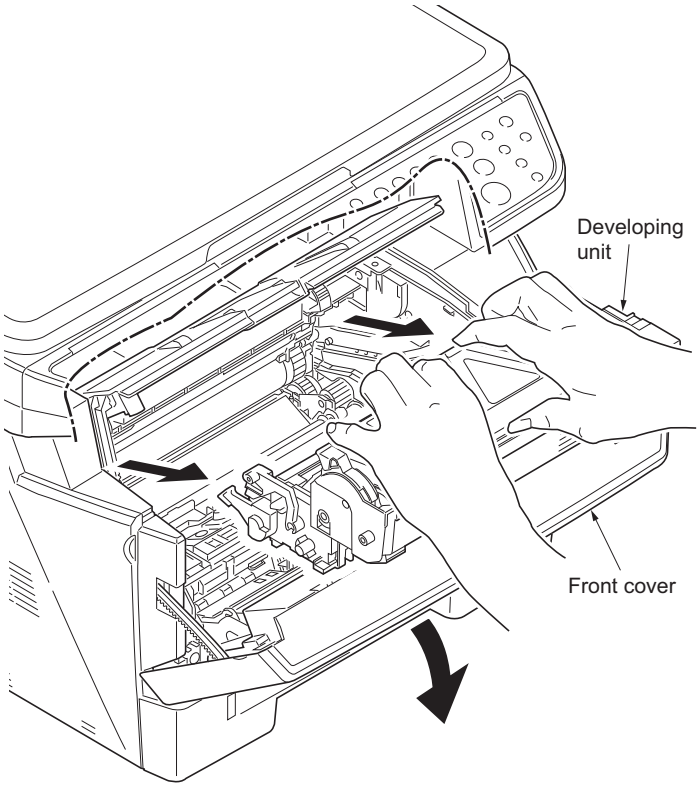

Figure 1-5-44

1-5-6 Drum section

(1) Detaching and refitting the drum unit

Procedure

1. Remove the developing unit (See page 1-5-29).
2. Remove the drum unit.
3. Check or replace the drum unit and refit all the removed parts.

NOTE:
When the periodic maintenance (replacing the maintenance kit, see page 2-4-4), perform following maintenance modes.

1. U251 clearing the maintenance count (see page 1-3-37)
2. U111 Clearing the drum drive time (see page 1-3-31)
3. U130 Initial setting for the developing unit (see page 1-3-32)

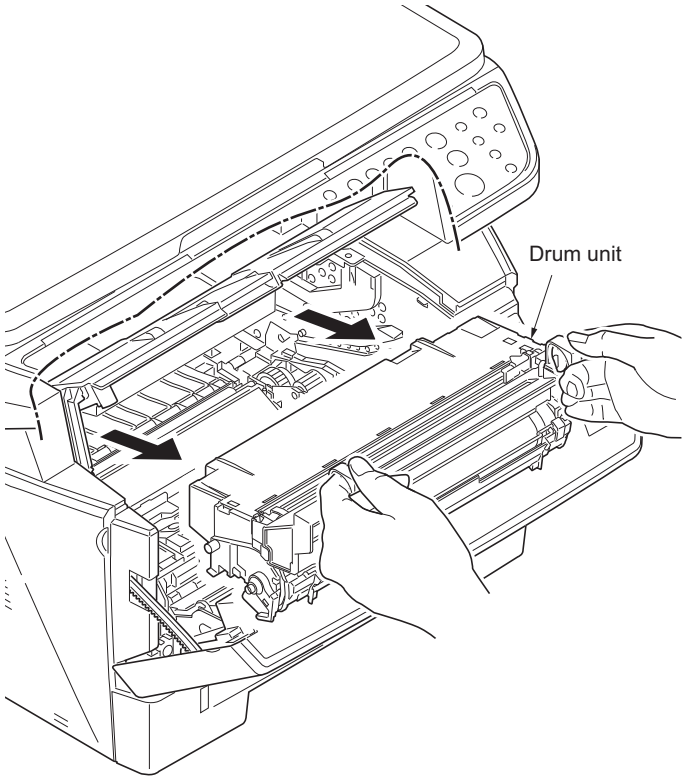

Figure 1-5-45

(2) Detaching and refitting the main charger unit

Procedure

1. Remove the developing unit (See page 1-5-29).
2. Remove the drum unit (See page 1-5-30).
3. Remove the tape.
4. While pushing on the main plate 1, slide the main charger unit 2.

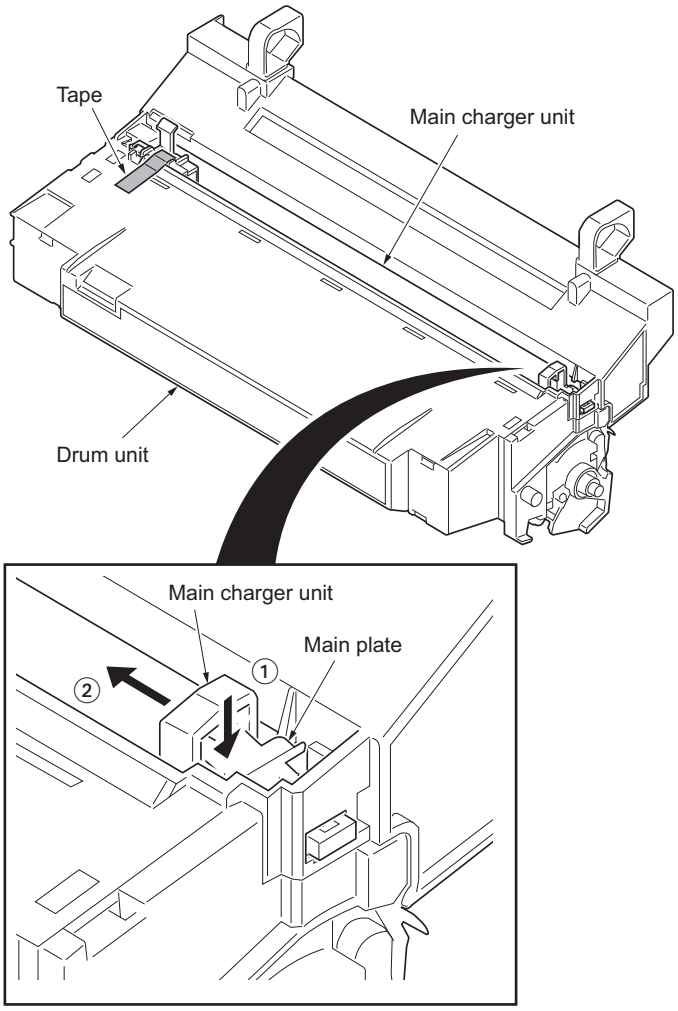

Figure 1-5-46

5. Remove the main charger unit by lifting it.
6. Check or replace the main charger unit and refit all the removed parts.

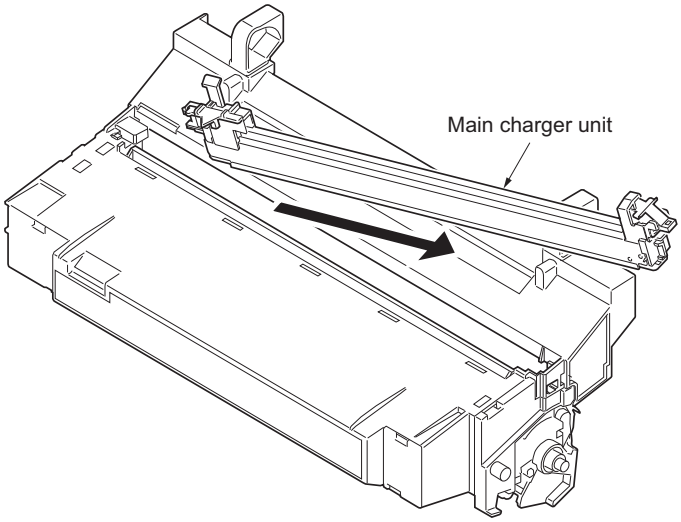

Figure 1-5-47

1-5-7 Transfer/separation section

(1) Detaching and refitting the transfer roller

Procedure

1. Remove the developing unit (See page 1-5-29).
2. Remove the drum unit (See page 1-5-30).
3. Slide the paper chute guide and unhook the hooks.
4. Remove the paper chute guide.

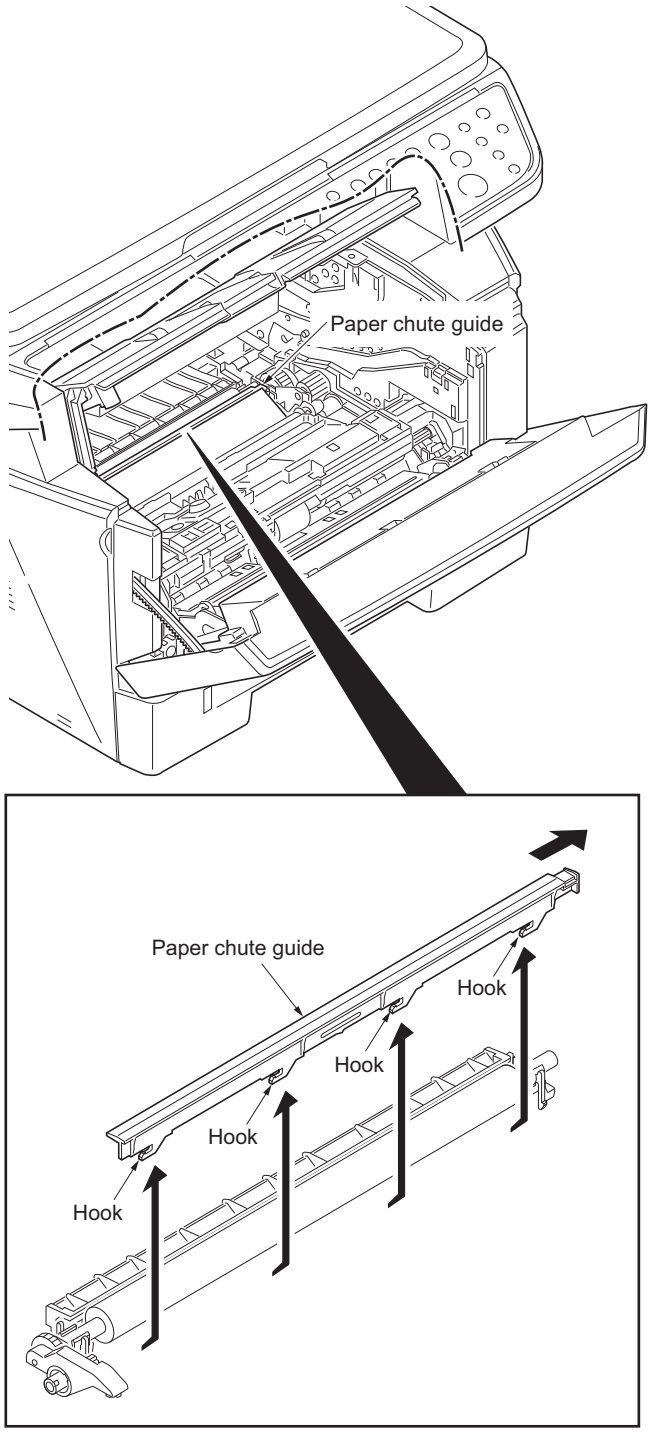

Figure 1-5-48

5. Remove the transfer roller's shaft from the both transfer bushes.
6. Remove the gear Z16 from the transfer roller.

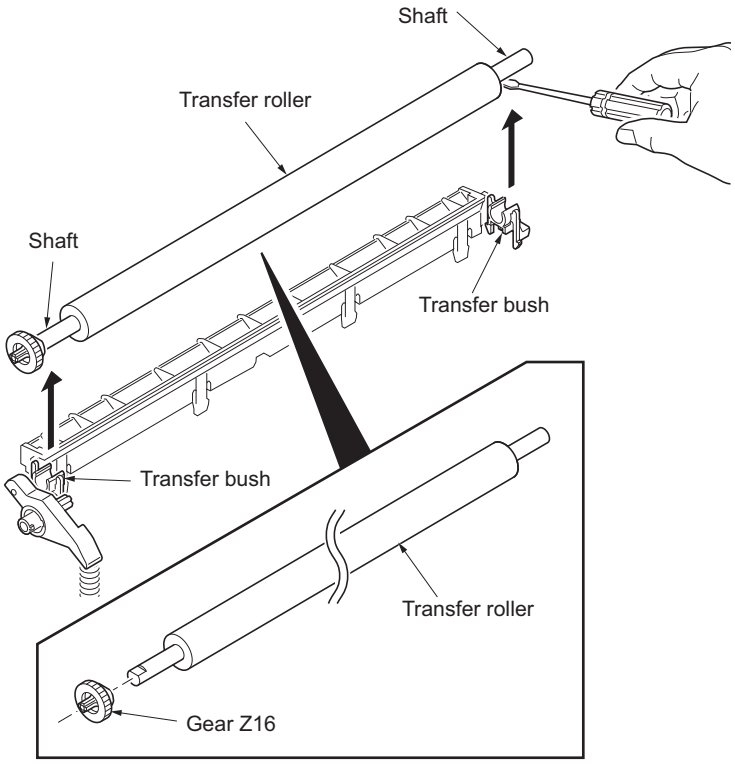

Figure 1-5-49

7. Check or replace the transfer roller and refit all the removed parts.

   Caution: When refitting the transfer roller, be careful about following point.
   Push the release lever to raise the lever end, then insert the front of gear Z16 under the release lever end.

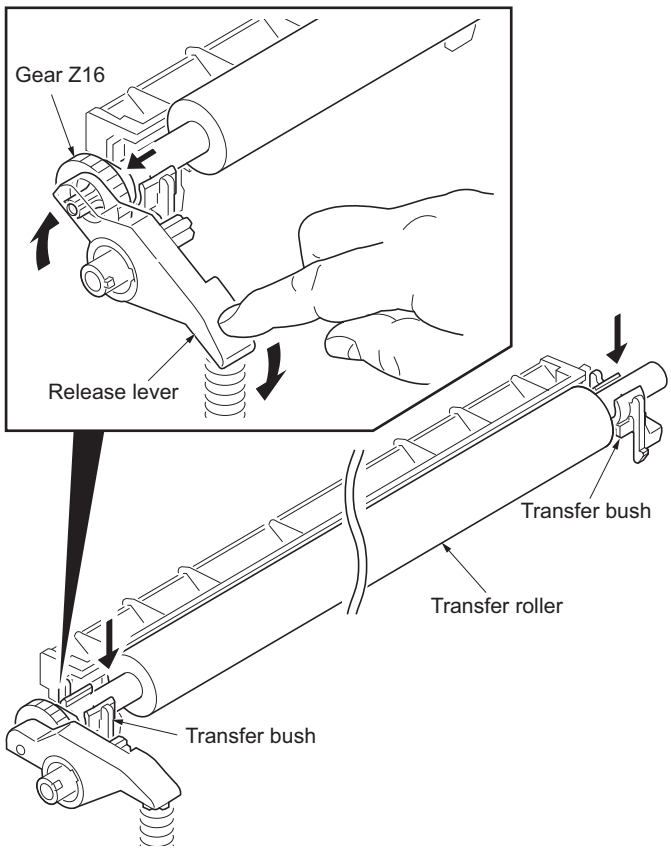

Figure 1-5-50

1-5-8 Fuser section

(1) Detaching and refitting the fuser unit

Procedure

1. Remove the left cover and right cover (See page 1-5-3).
2. Remove the wires from three clamps.
3. Remove the connector from the power source PWB.

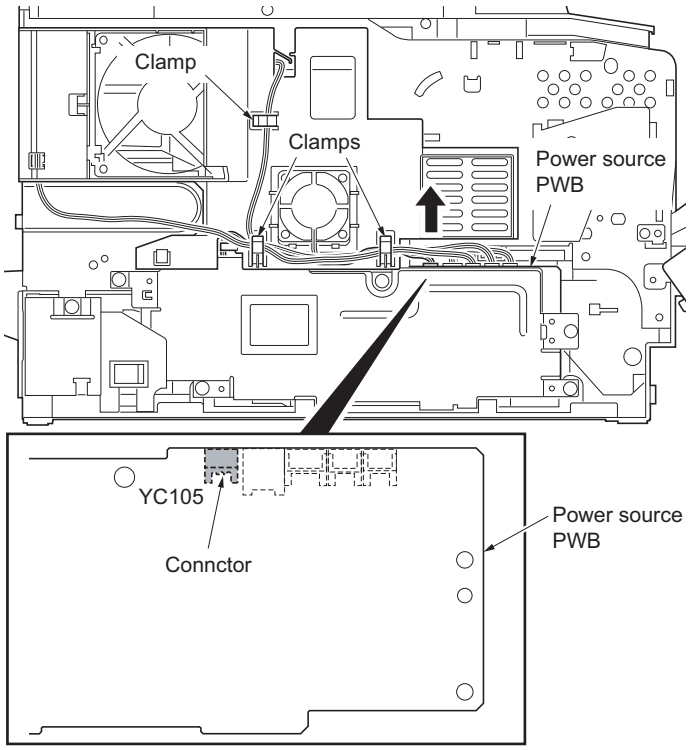

Figure 1-5-51

4. Unhook four hooks and then remove the frame left duct.
5. Remove the wires from the clamp.

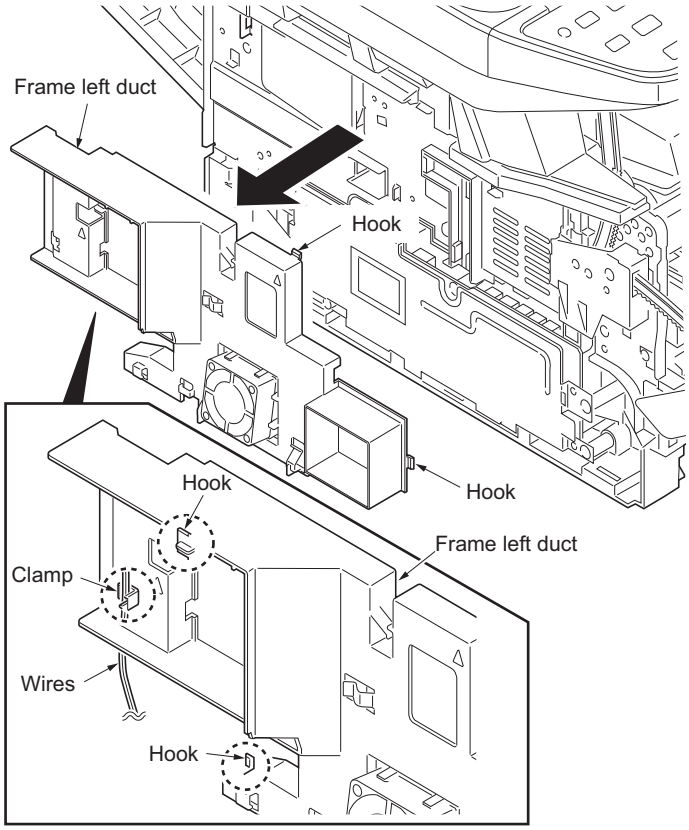

Figure 1-5-52

6. Remove the connector from the power source PWB.

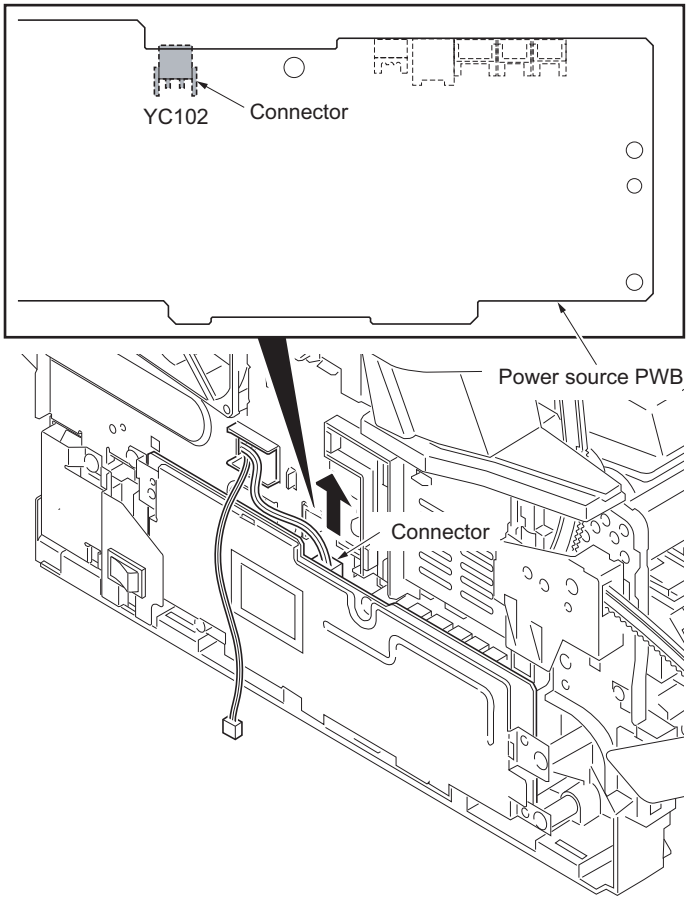

Figure 1-5-53

7. Remove the connector from the control PWB.

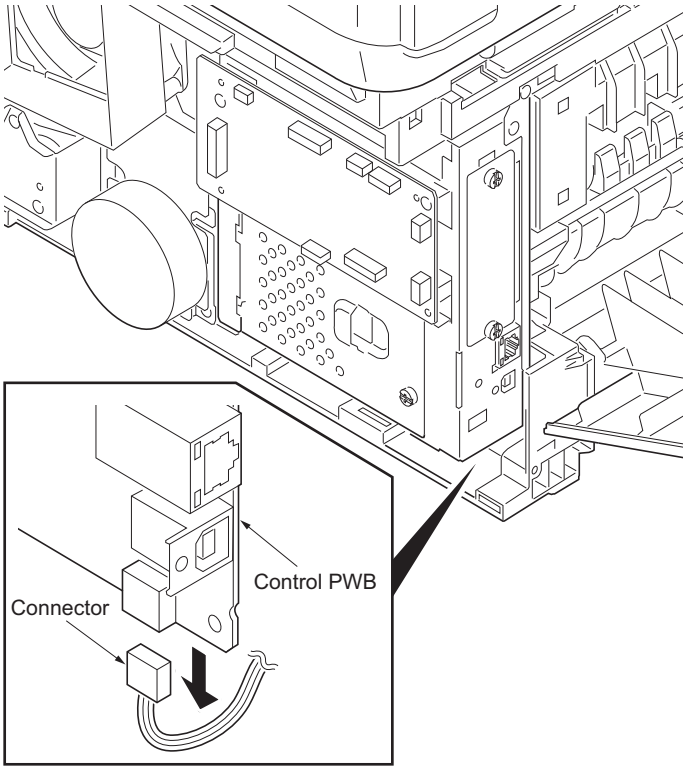

Figure 1-5-54

8. Remove the rear cover.

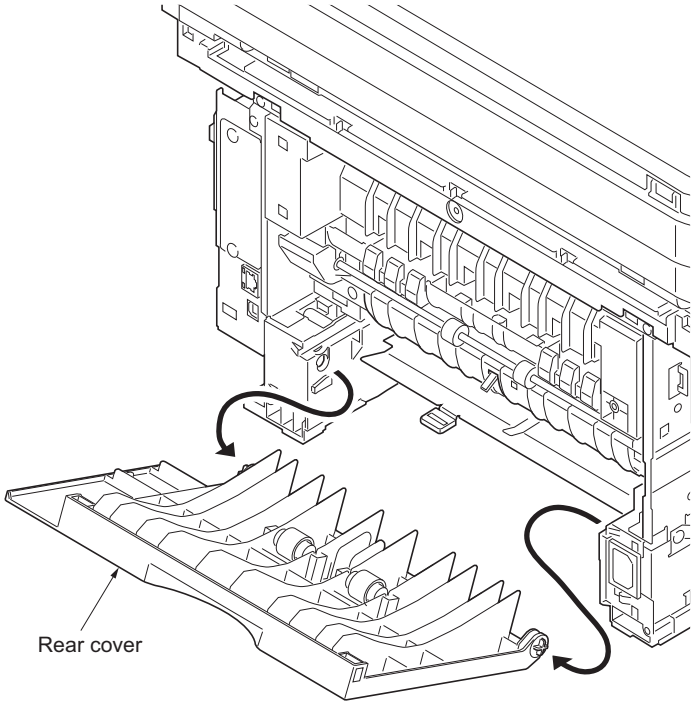

Figure 1-5-55

9. Remove two screws and then remove the fuser unit.

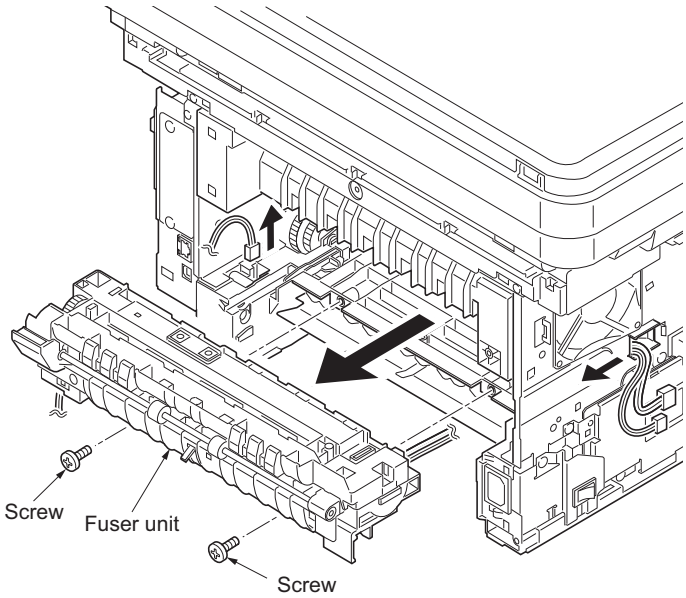

Figure 1-5-56

10. Check or replace the fuser unit and refit all the removed parts.

    Caution: When reinstalling the fuser unit, tighten up a screw while pressing the fuser unit in order of 1 to 2.

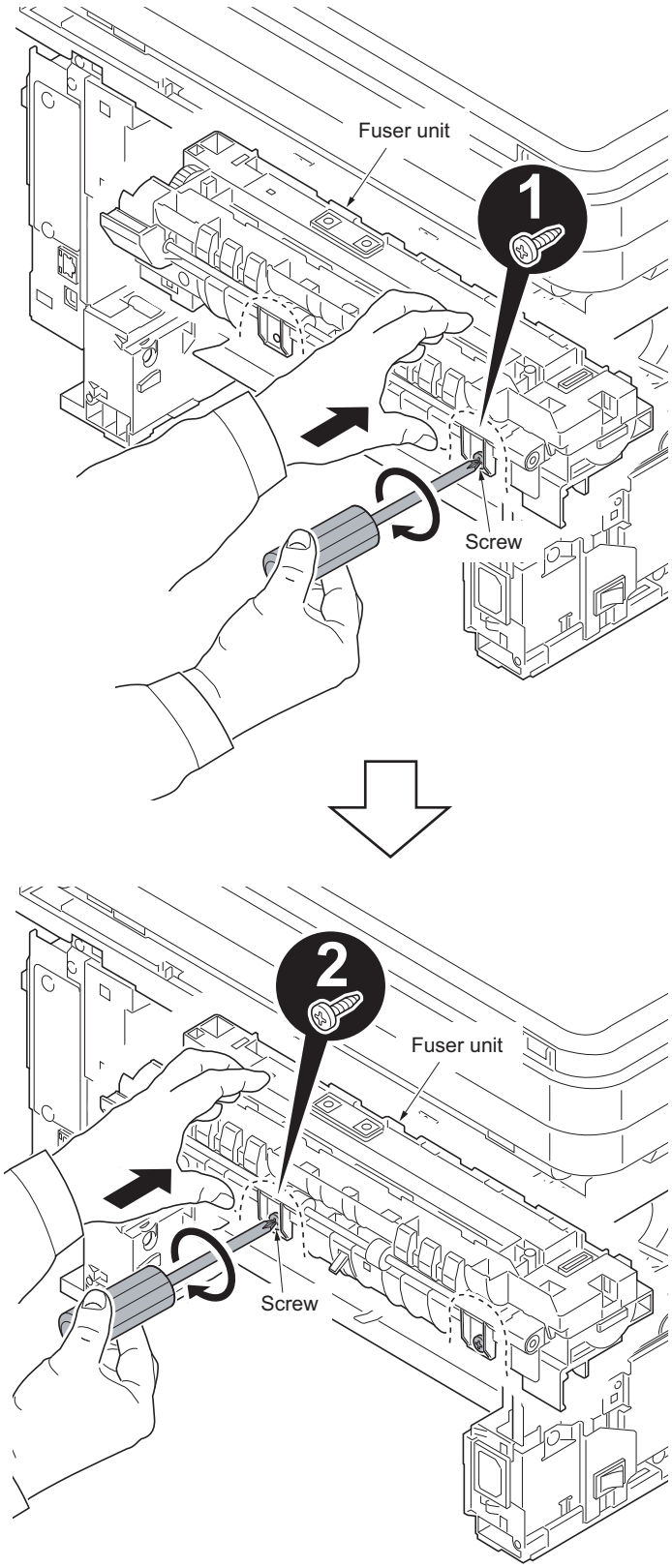

Figure 1-5-57

(2) Switching the fuser pressure

The fuser pressure may be decreased to suppress the print quality problems such as paper creases and curls.
It must be cautioned that decreasing the fuser pressure could cause loose toner fusing.

Procedure

1. Remove the cassette (See page 1-5-6).
2. Open the duplex cover.
3. Slide the fuser lever R and L.
   Normal: Flush with the front of the machine.
   Fuser pressure decreased: Flush with the rear of the machine.

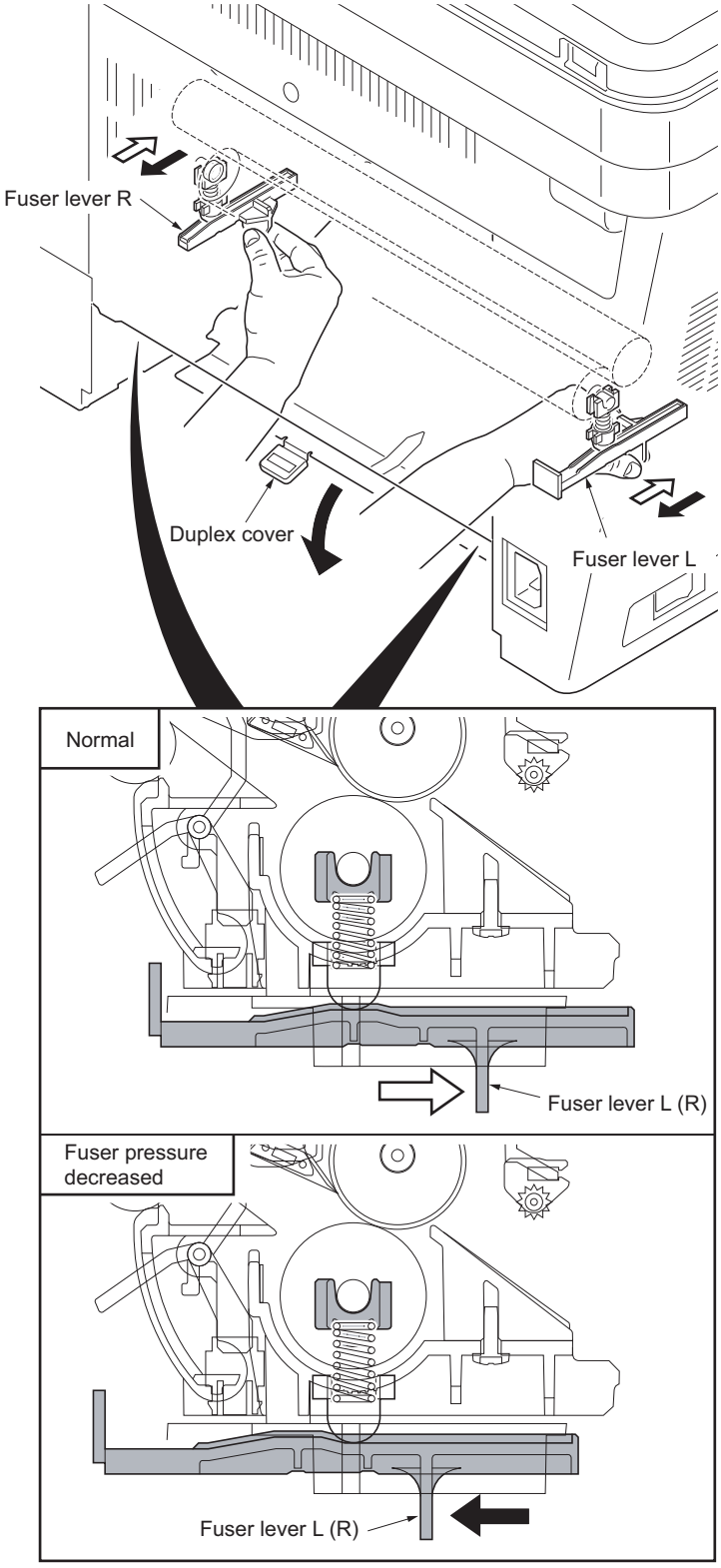

Figure 1-5-58

1-5-9 PWBs

(1) Detaching and refitting the control PWB

Procedure

1. Remove the right cover (See page 1-5-3).
2. Remove the five connectors from the scanner PWB.
3. Remove nineteen connectors and two FFCs form the control PWB.
4. Remove the wires from the clamp.

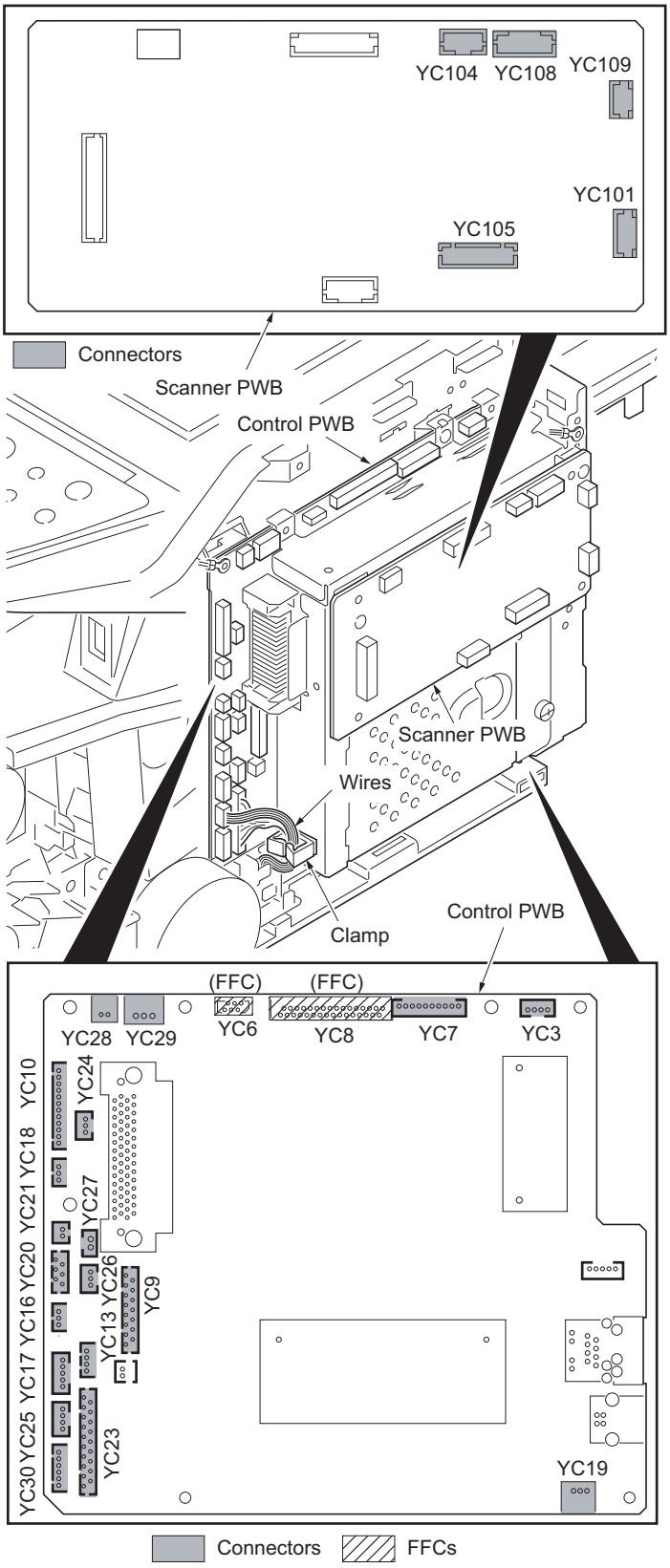

Figure 1-5-59

5. Remove six screws and two grounding terminal.

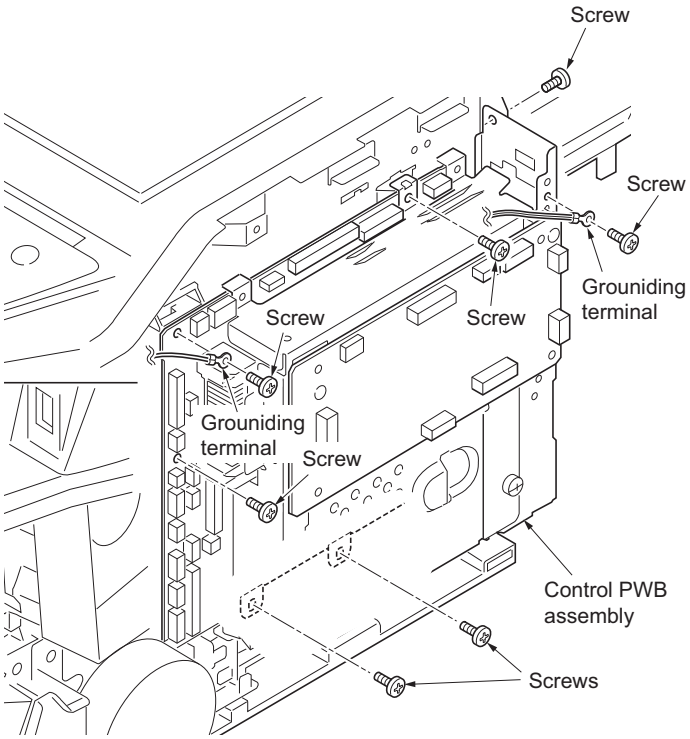

Figure 1-5-60

6. Unhook the hook and then remove the control PWB assembly.

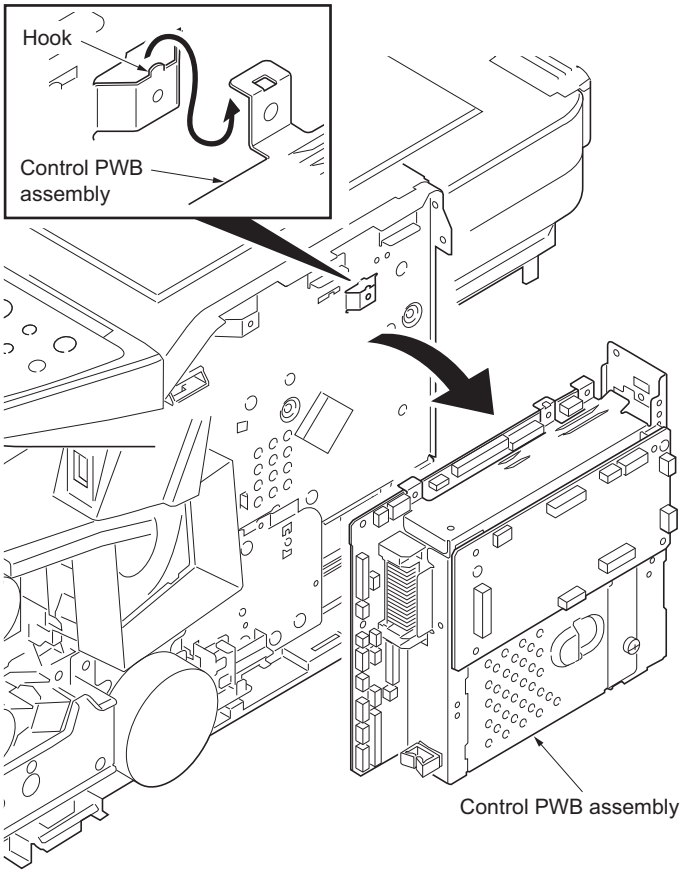

Figure 1-5-61

7. Remove five screws and then remove the control PWB.
8. Check or replace the control PWB and refit all the removed parts.

   To replace the control PWB, remove the EEPROM (U17) from the old control PWB and mount it to the new control PWB.

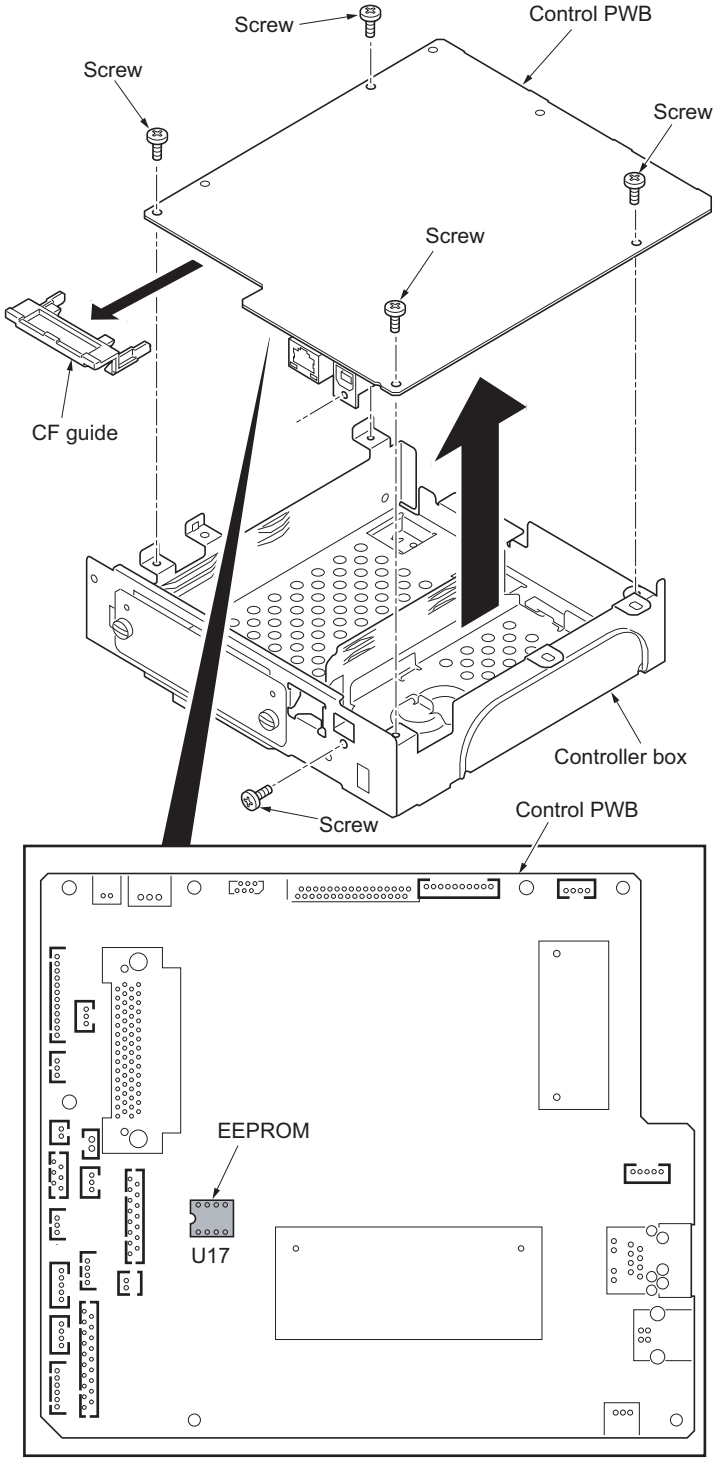

Figure 1-5-62

(2) Detaching and refitting the power source PWB

Procedure

1. Remove the left cover (See page 1-5-3).
2. Remove the wires from three clamps.
3. Remove five connectors from the power source PWB.

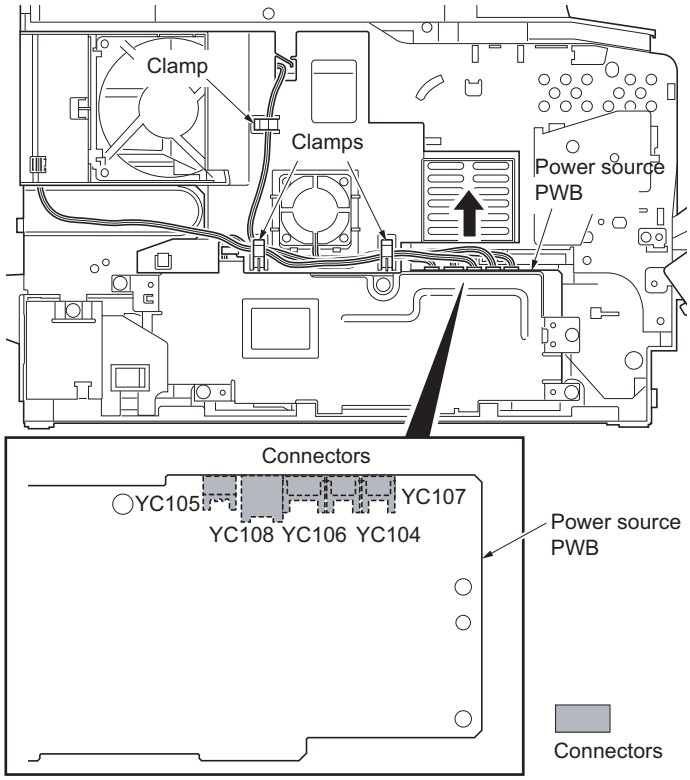

Figure 1-5-63

4. Unhook four hooks and then remove the frame left duct.
5. Remove the wire from the clamp.

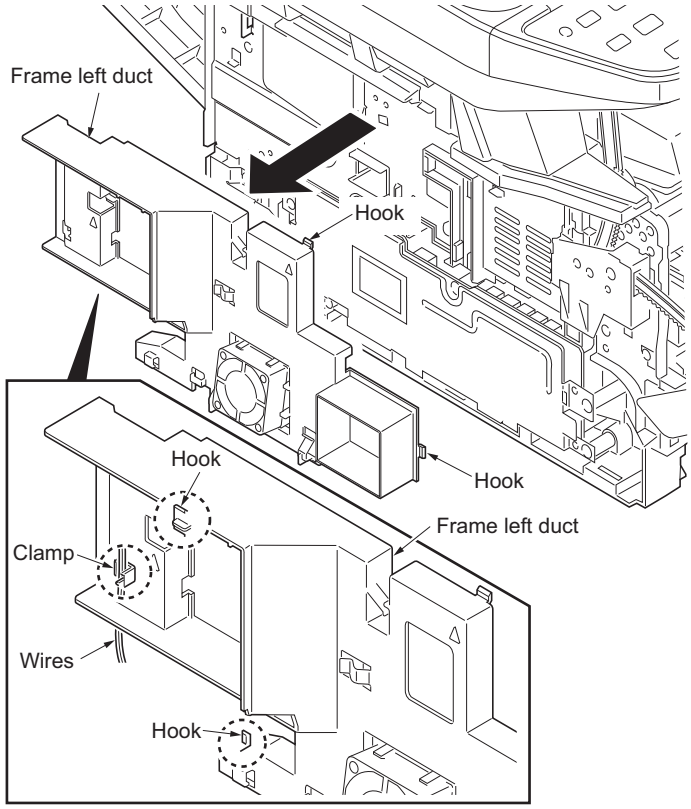

Figure 1-5-64

6. Remove the screw and then detach the inlet mount.

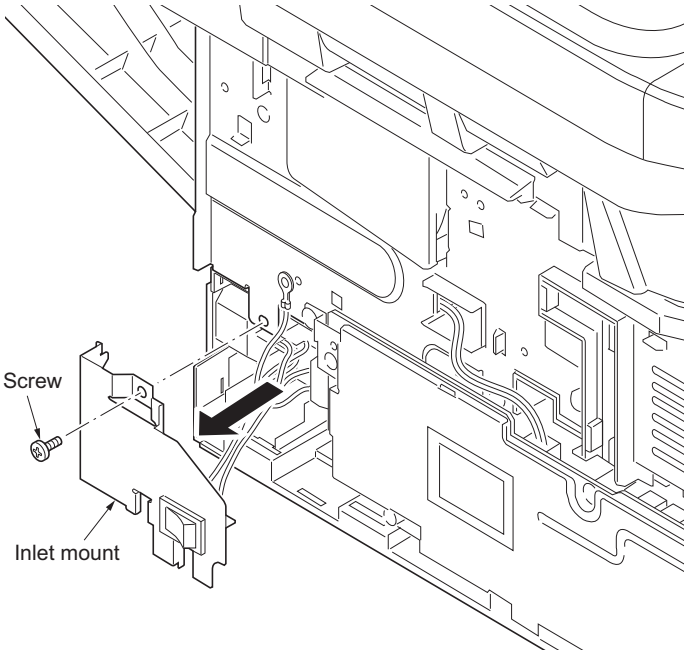

Figure 1-5-65

7. Remove five screws.
8. Remove three connectors and then remove the power source PWB assembly.

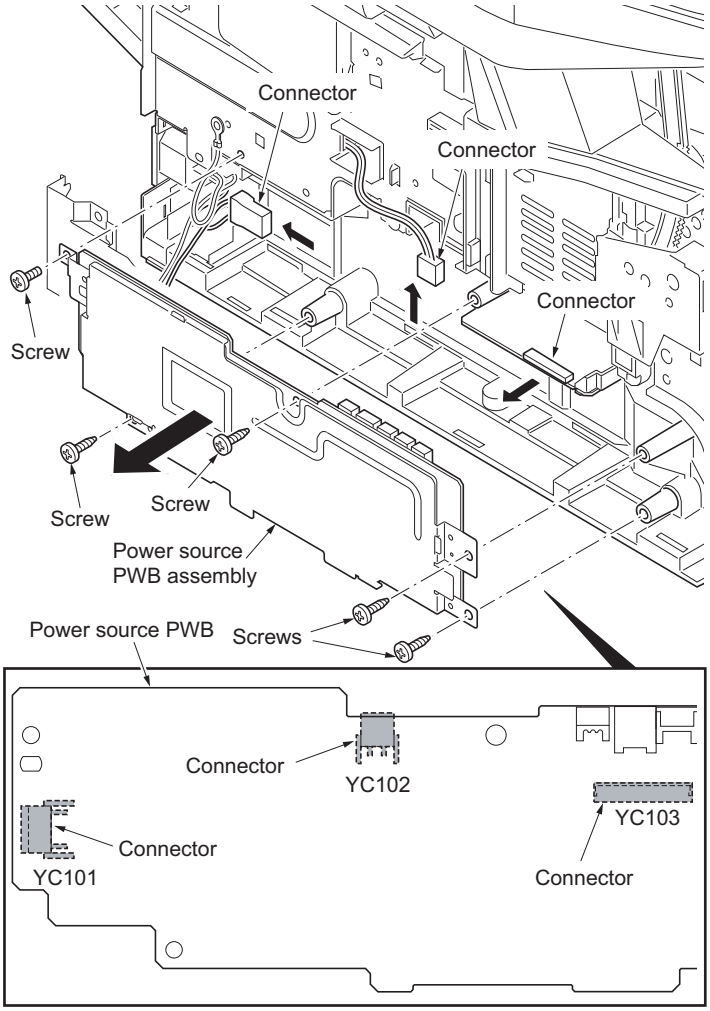

Figure 1-5-66

9. Remove four screws and then remove the power source PWB from the power source PWB plate.
10. Check or replace the power source PWB and refit all the removed parts.

    Caution: The power source PWB sheet must be installed in the specified position.

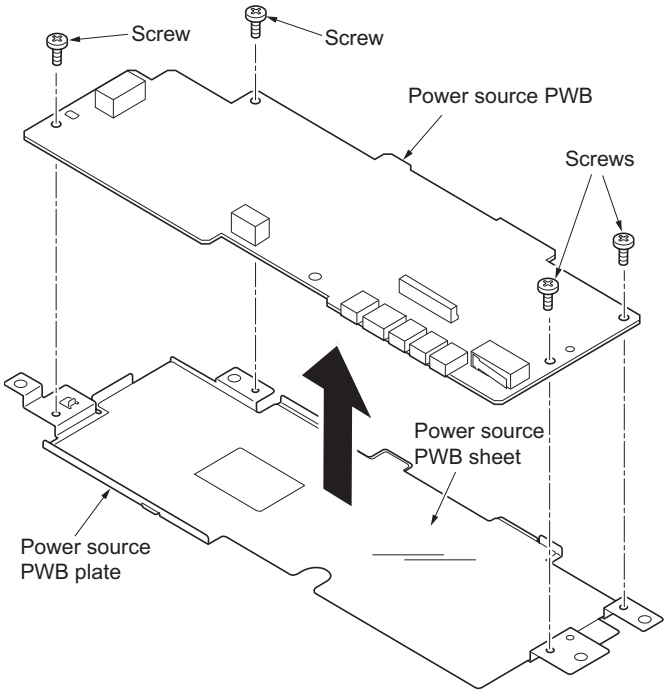

Figure 1-5-67

(3) Detaching and refitting the high voltage PWB

Procedure

1. Remove the developing unit (See page 1-5-29).
2. Remove the drum unit (See page 1-5-30).
3. Remove the cassette (See page 1-5-6).
4. Remove the left cover and right cover (See page 1-5-3).
5. Remove the power source PWB (See page 1-5-42).
6. Turn the printer with the front side up.
7. Remove the stopper.
8. Remove the DU holder.

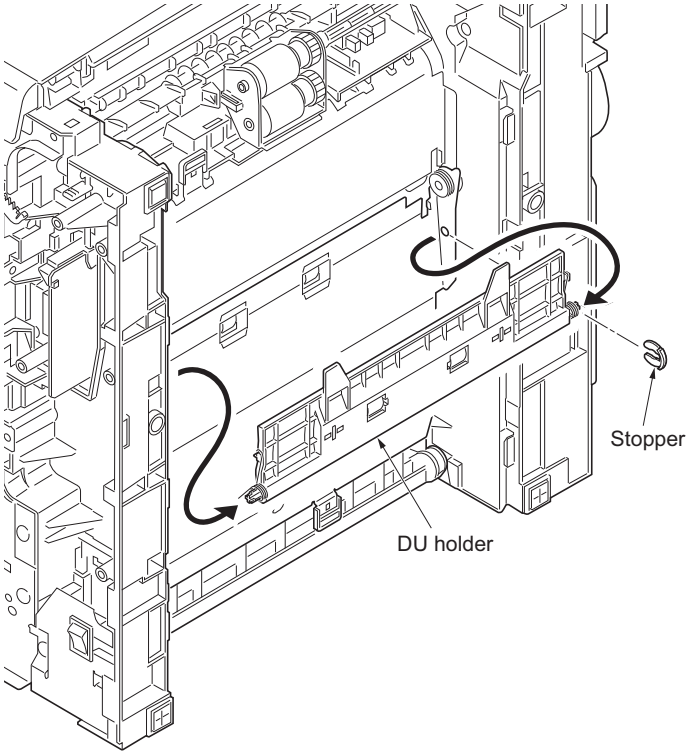

Figure 1-5-68

9. Pull the DU bush out.
10. Remove the DU cover assembly.

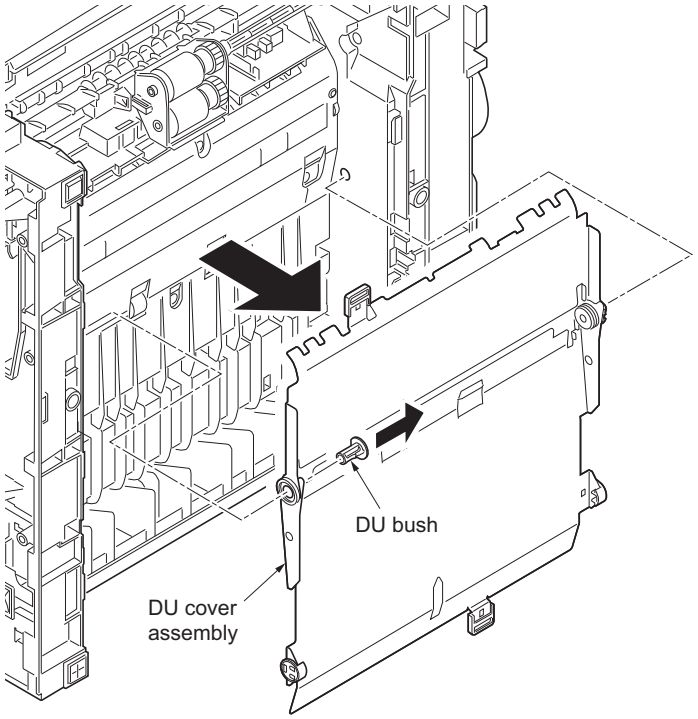

Figure 1-5-69

11. Remove four screws.
12. Unhook three hooks and then remove the lower base cover.

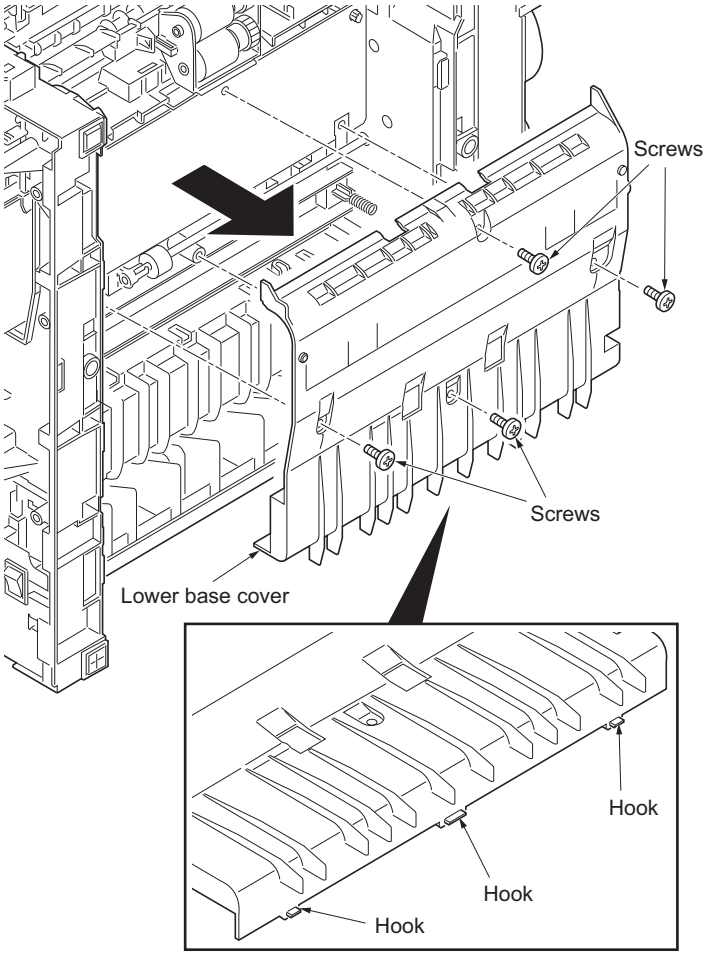

Figure 1-5-70

13. Remove the spring.
14. Remove the cassette pin.

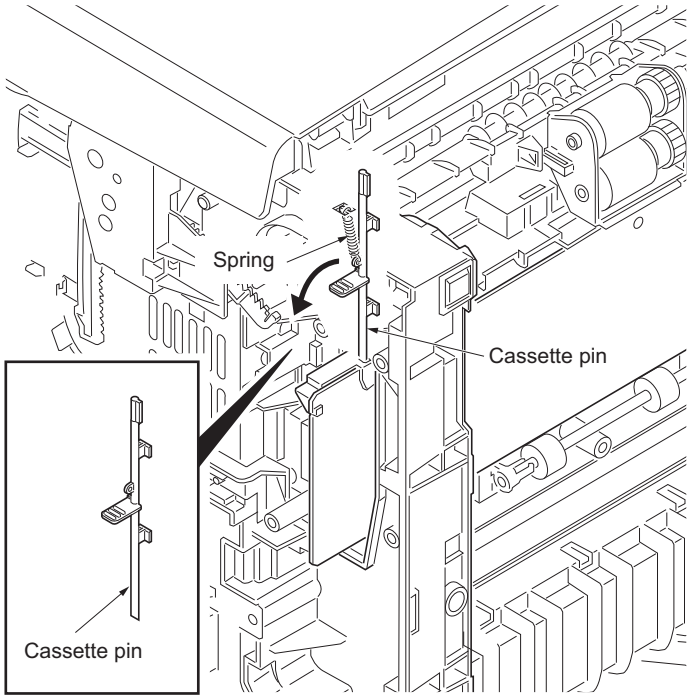

Figure 1-5-71

15. Remove two connectors and then remove the high voltage PWB.
16. Remove the cassette pin holder from the high voltage PWB.

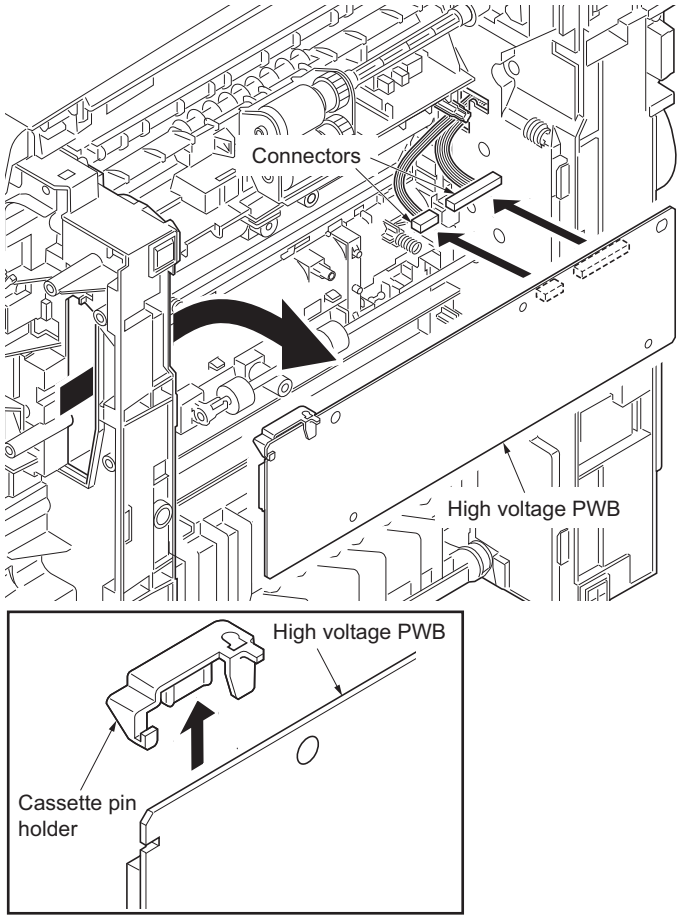

Figure 1-5-72

17. Check or replace the high voltage PWB and refit all the removed parts.

    When refitting the high voltage PWB, be careful about following points.

    - Position the ground plate so that it is atop the high voltage PWB.
    - Each interface is firmly in contact with each spring.
    - The bias contact pin must be installed in the specified position.
    - The cassette pin must be inserted in the cassette pin holder.

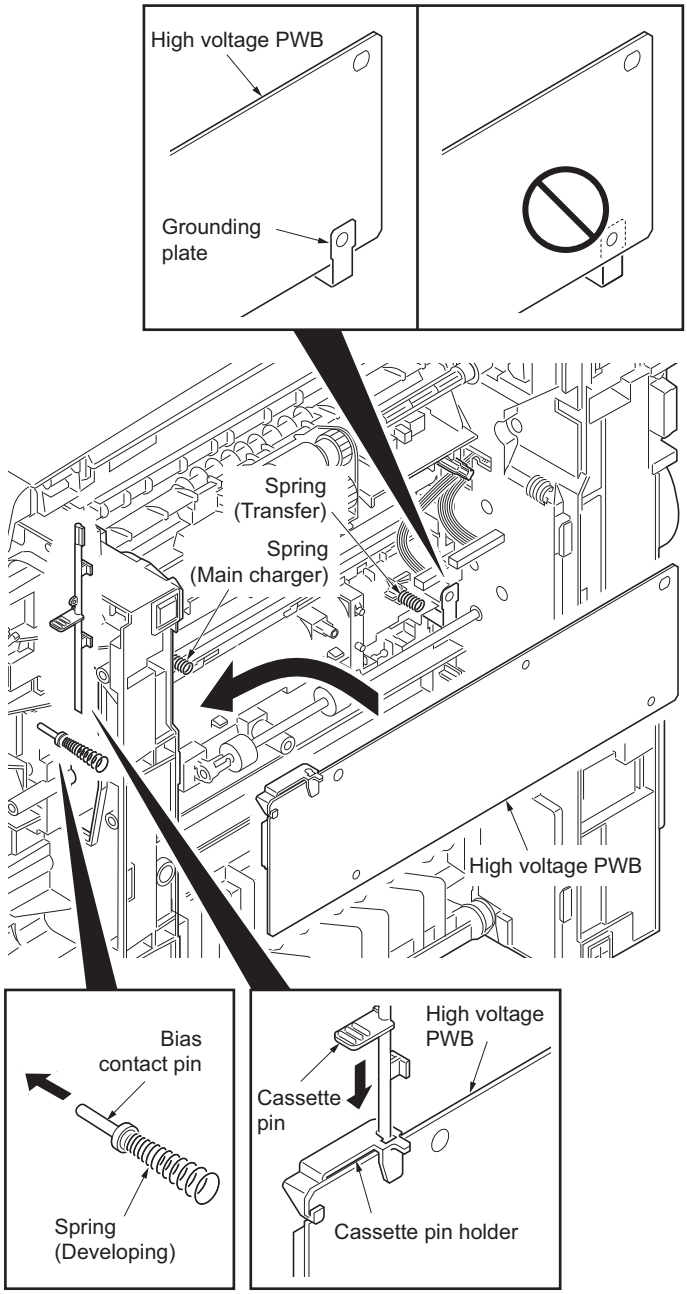

Figure 1-5-73

(4) Detaching and refitting the scanner PWB

Procedure

1. Remove the right cover (See page 1-5-3).
2. Remove six connectors and the FFC from the scanner PWB.

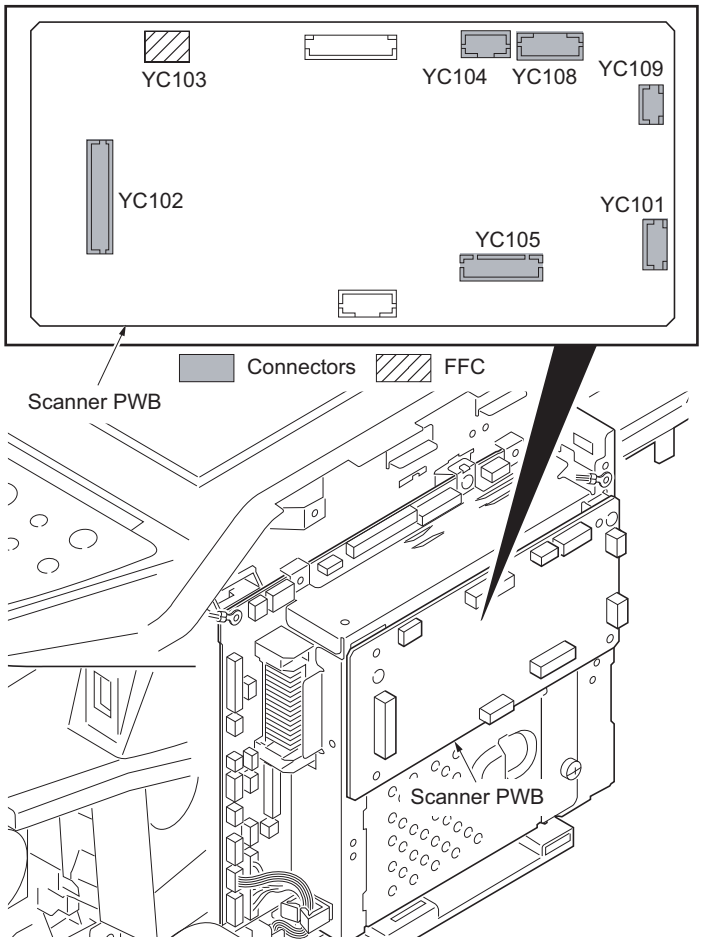

Figure 1-5-74

3. Remove four screws and then remove the scanner PWB.
4. Check or replace the scanner PWB and refit all the removed parts.

NOTE:
When the replacing the scanner PWB, perform following maintenance modes.

1. U425 Setting the target (see page 1-3-47)
2. U411 Adjusting the scanner automatically (see page 1-3-46)

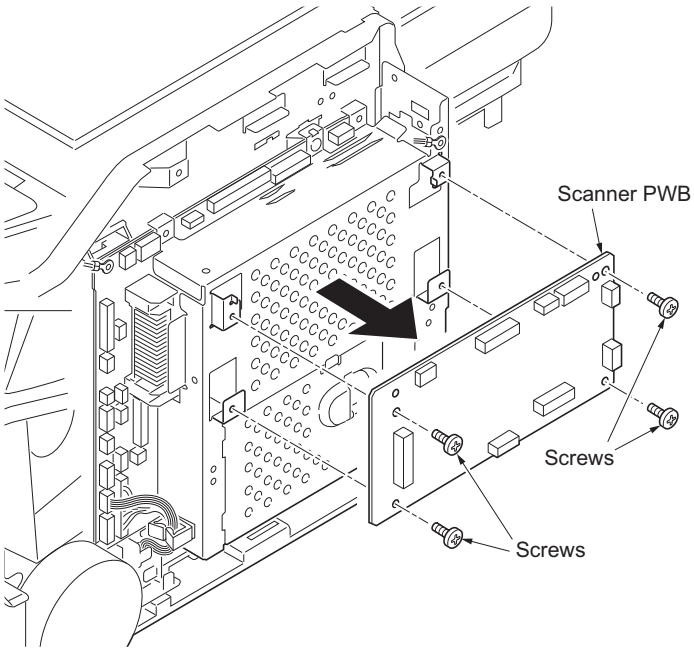

Figure 1-5-75

1-5-10 Others

(1) Detaching and refitting the main motor

Procedure

1. Remove the right cover (See page 1-5-3).
2. Remove the connector.
3. Remove the M3 screw and two M4 screws.
4. Remove the main motor.
5. Check or replace the main motor and refit all the removed parts.

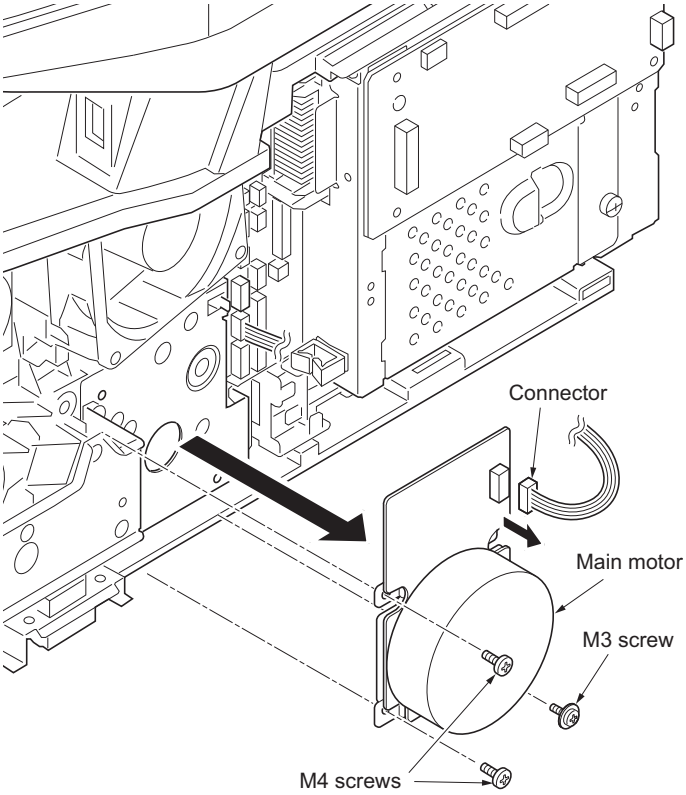

Figure 1-5-76

(2) Direction of installing the left cooling fan motor, right cooling fan motor and power source fan motor

When detaching or refitting a fan motor, be careful of the airflow direction (intake or exhaust).

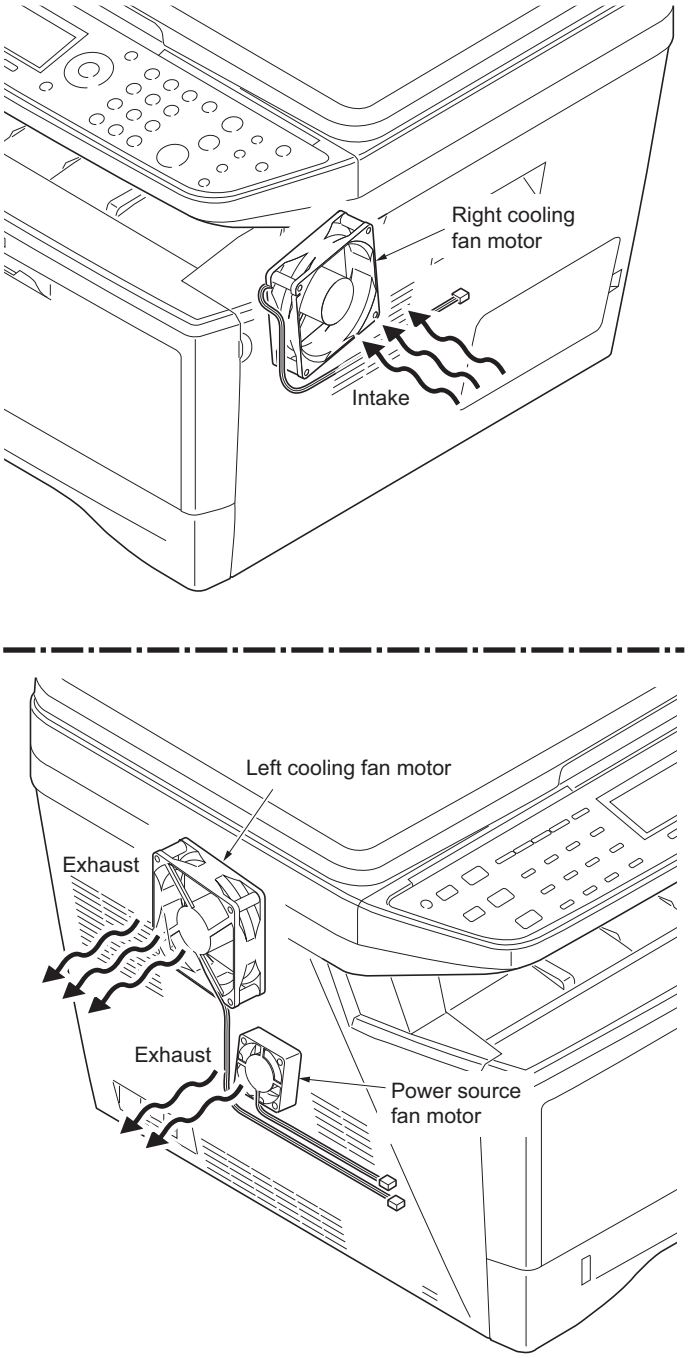

Figure 1-5-77

This page is intentionally left blank.

1-6-1 Firmware

(1) Upgrading the firmware

Follow the procedure below to upgrade the firmware of control PWB (main controller and engine) and scanner PWB.

Preparation
Extract the file that has the download firmware and put them in the USB Memory.

Procedure

1. Turn ON the main switch and confirm if the screen shows “Ready to print” then, turn OFF the main power switch.
2. Insert USB memory that has the firmware in the USB memory slot.
3. Turn ON the main power switch.
4. About 40 seconds later, “Firmware Update Downloading” will be displayed and blinking the memory LED (this shows to start the download).
5. Display the software that now upgrading (5 minutes).

   “Firmware Update Main”
   “Engine”
   “Scanner”

6. Display the completion of the upgrade (Memory LED is ON condition).

   Firmware Update
   Main: Completed
   Engine: Completed
   Scanner: Completed

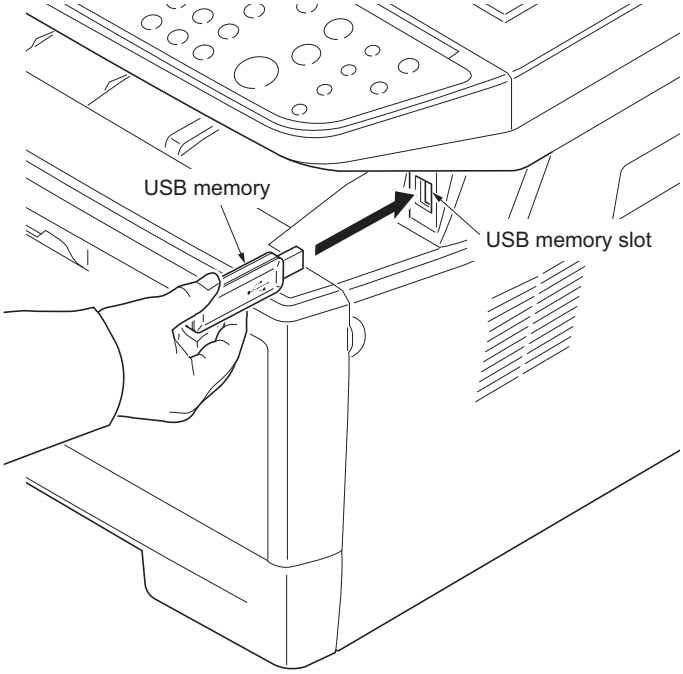

Figure 1-6-1

7. Turn OFF the main power switch and remove the USB memory.

Check the result of the version up

1. Output the service status by the U000 or execute U019 to check.

1-6-2 Remarks on control PWB replacement

When replacing the control PWB, remove the EEPROM (U17) from the control PWB that has been removed and then reattach it to the new control PWB.

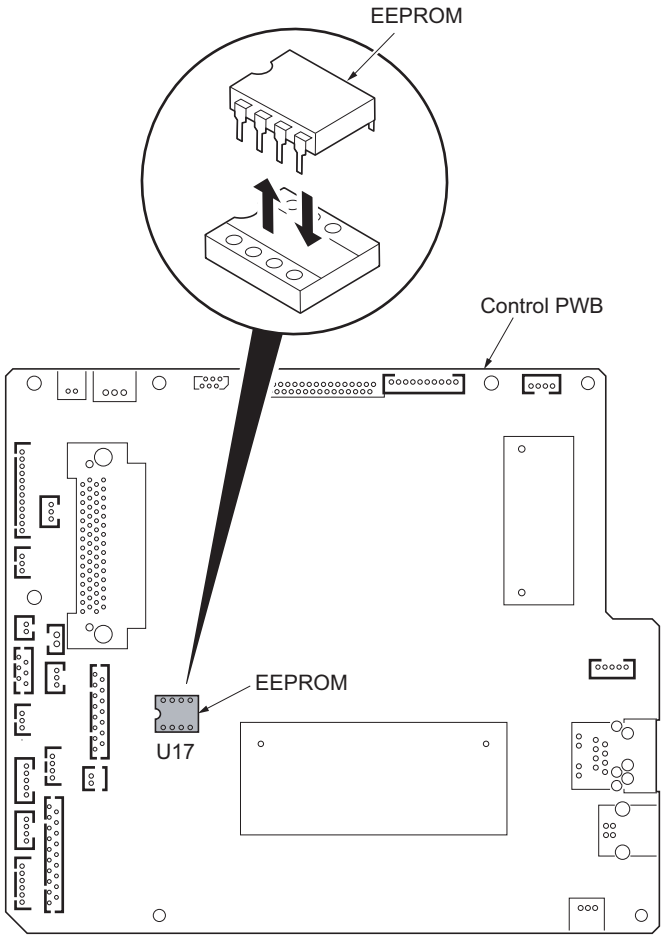

Figure 1-6-2

2-1-1 Paper feed/conveying section

Paper feed/conveying section consists of the paper feed unit that feeds paper from the cassette and the MP tray paper feed unit that feeds paper from the MP tray, and the paper conveying section that conveys the fed paper to the transfer/separation section.

(1) Cassette paper feed section

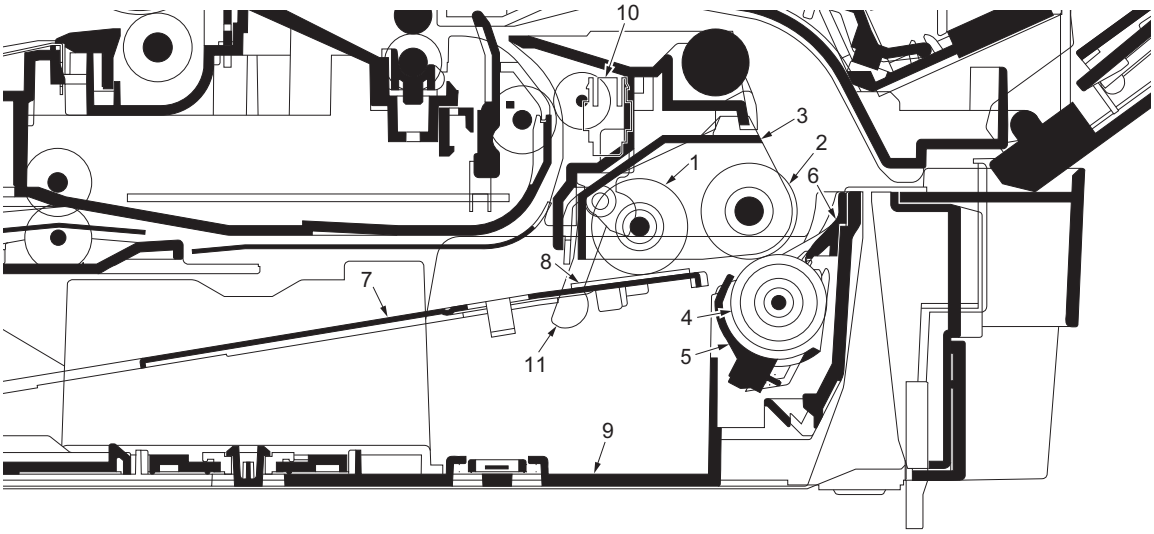

Figure 2-1-1 Cassette paper feed section

(1)	Pickup roller	(7)	Bottom plate
(2)	Paper feed roller	(8)	Bottom pad
(3)	Feed holder	(9)	Cassette base
(4)	Retard roller	(10)	Paper sensor
(5)	Retard holder	(11)	Actuator (paper sensor)
(6)	Retard guide		

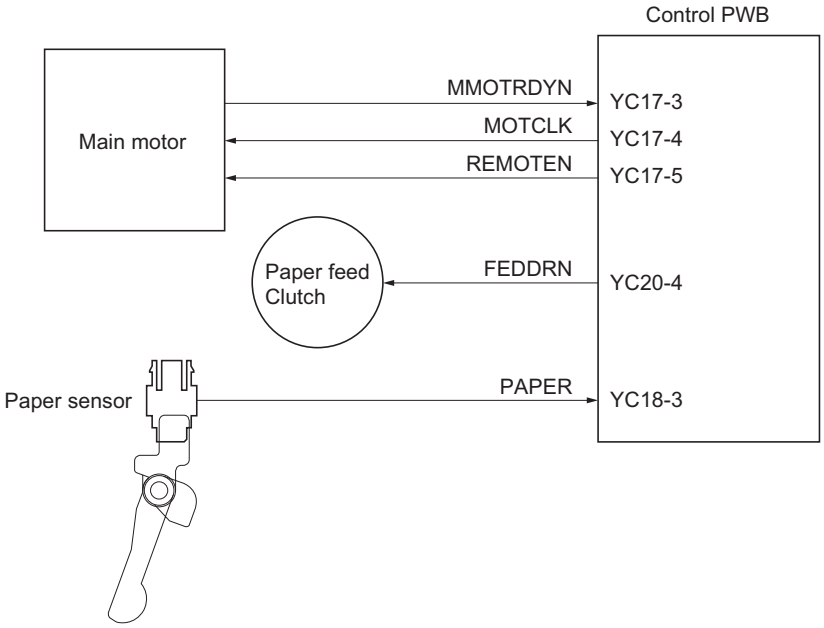

Figure 2-1-2Cassette paper feed section block diagram

(2) MP tray paper feed section

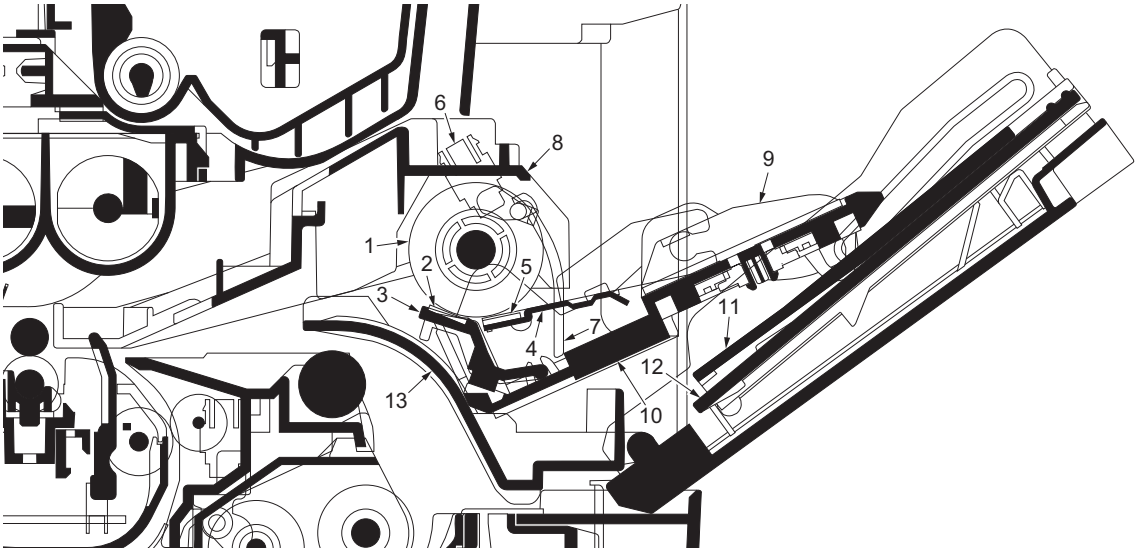

Figure 2-1-3 MP tray paper feed section

(1)	MP paper feed roller	(8)	MPF frame
(2)	MPF separation pad	(9)	MPF guide R/L
(3)	MPF separator	(10)	MPF base
(4)	MPF bottom plate	(11)	MPF middle tray
(5)	MPF friction pad	(12)	MPF upper tray
(6)	MP paper sensor	(13)	MPF turn guide
(7)	Actuator (MP paper sensor)		

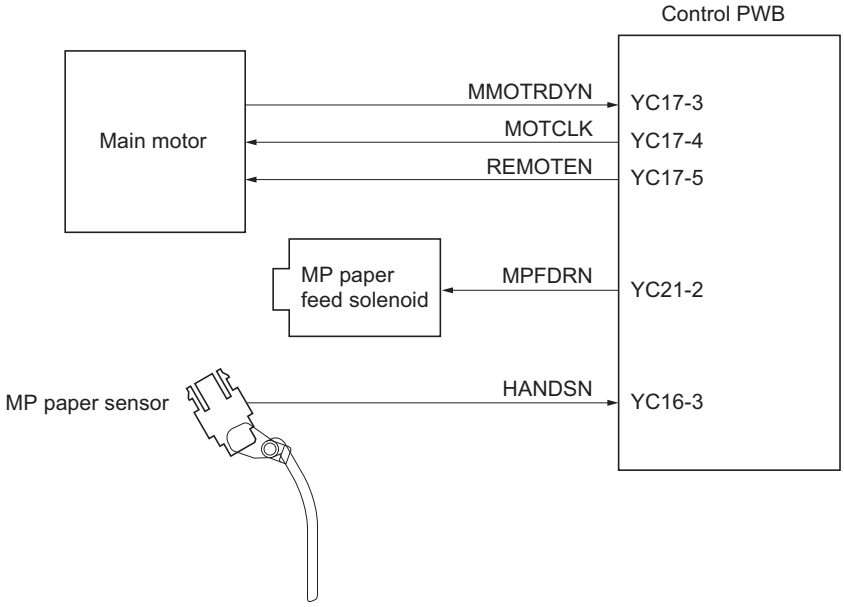

Figure 2-1-4 MP tray paper feed section block diagram

(3) Paper conveying section

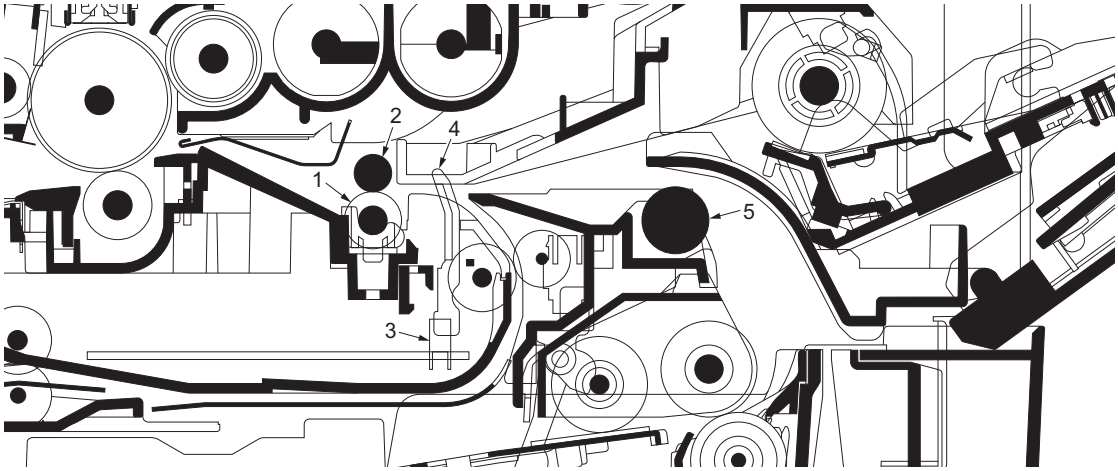

Figure 2-1-5 Paper conveying section

(1) Lower registration roller
(2) Upper registration roller
(3) Registration sensor
(4) Actuator (registration sensor)
(5) Feed pulley

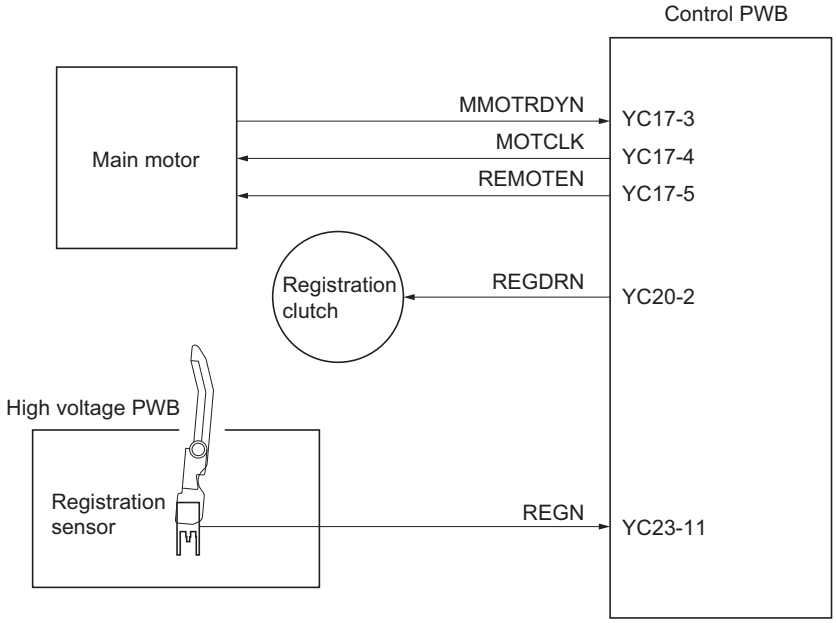

Figure 2-1-6 Paper conveying section block diagram

2-1-2 Drum section

(1) Drum section

The durable layer of organic photoconductor (OPC) is coated over the aluminum cylinder base. The OPC tend to reduce its own electrical conductance when exposed to light. After a cyclic process of charging, exposure, and development, the electrostatic image is constituted over the OPC layer.
Since the OPC is materialized by resin, it is susceptible to damage caused by sharp edges such as a screwdriver, etc., resulting in a print quality problem. Also, finger prints can cause deterioration of the OPC layer, therefore, the drum (in the drum unit) must be handled with care. Substances like water, alcohol, organic solvent, etc., should be strictly avoided.
As with all other OPC drums, the exposure to a strong light source for a prolonged period can cause a print quality problem. The limit is approximately 500 lux for less than five minutes. If the drum (drum unit) remains removed form the machine, it should be stored in a cool, dark place.
.

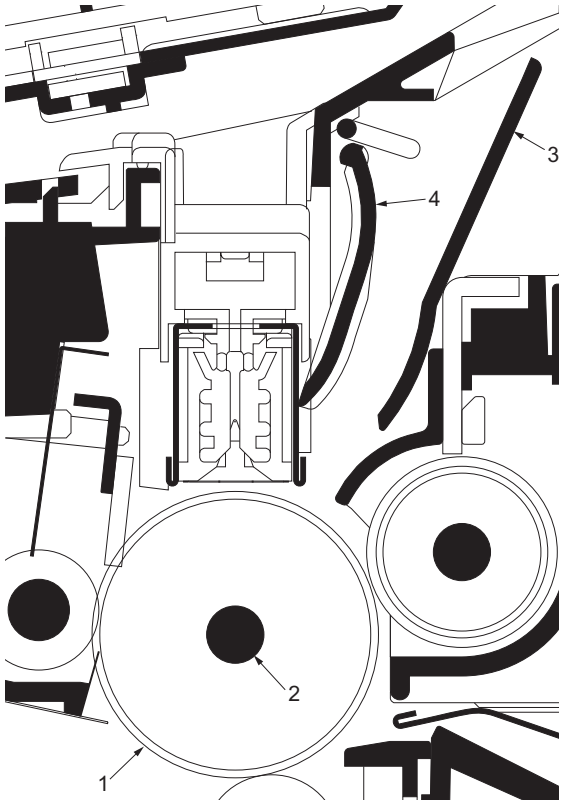

Figure 2-1-7 Drum unit

(1) Drum
(2) Drum shaft
(3) Drum cover A
(4) Drum cover B

(2) Main charger unit

As the drum rotates in a “clean (neutral)” state, its photoconductive layer is given a uniform, positive (+) corona charge dispersed by the main charger wire. Due to high-voltage scorotron charging, the charging wire can get contaminated by oxidization after a long run. Therefore, the charger wire must be cleaned at a specific interval. Cleaning the charging wire prevents print quality problems such as black streaks.

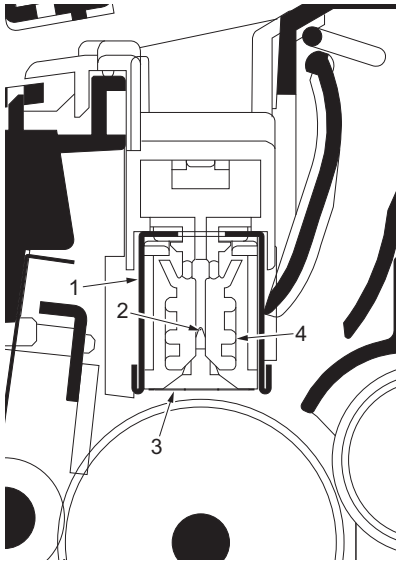

Figure 2-1-8 Main charger unit

(1) Main charger shield
(2) Main charger wire
(3) Main charger grid
(4) Main charger wire cleaner

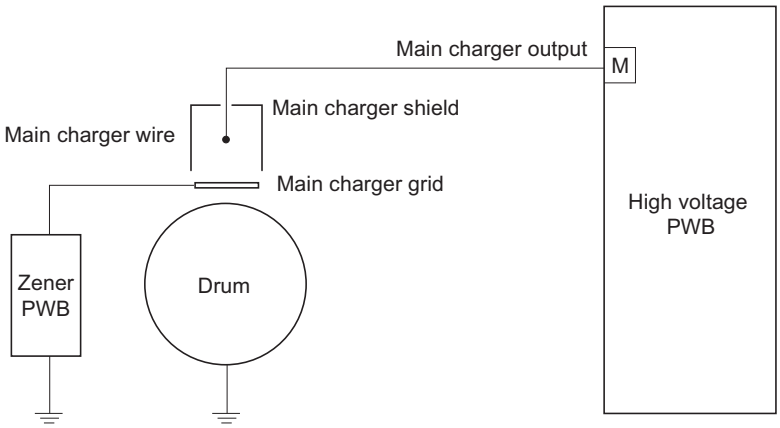

Figure 2-1-9 Drum unit and main charger unit block diagram

2-1-3 Optical section

(1) Scanner unit

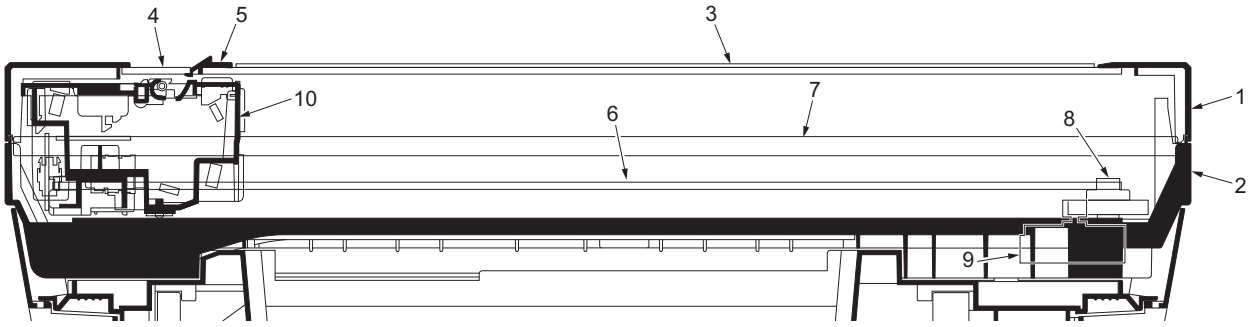

Figure 2-1-10Scanner unit

(1)	ISU top frame	(6)	ISU belt
(2)	ISU bottom frame	(7)	ISU shaft
(3)	Contact glass	(8)	ISU gear 63/32
(4)	DP contact glass	(9)	ISU motor
(5)	Size indicator plate	(10)	Image scanner unit (ISU)

(2) Image scanner unit (ISU)

The image scanner unit consists of an exposure lamp, four mirrors, a lens, a CCD PWB, and so on. Also an inverter PWB for driving the exposure lamp and a home position sensor for detecting the home position of the image scanner unit are incorporated.
The original on the contact glass is exposed to the light of the exposure lamp that is reflected by the ISU reflector. The image is input through reflection by the four mirrors and through the ISU lens to the CCD image sensor on the CCD PWB. The CCD image sensor scans one row of the image in the main scan direction, converts it to electric signals, and outputs them to the control PWB. Then the image scanner unit is moved in the sub scan direction along the ISU shaft, and the CCD image sensor scans the next row of the image in the main scan direction. The operation described above is repeated for scanning the overall image of the original. If a document processor (DP) is used, the image scanner unit stops at the position of the DP contact glass and scans sequentially one row of the image on the original in synchronization with the moving timing of the original in the sub scan direction by driving the DP.

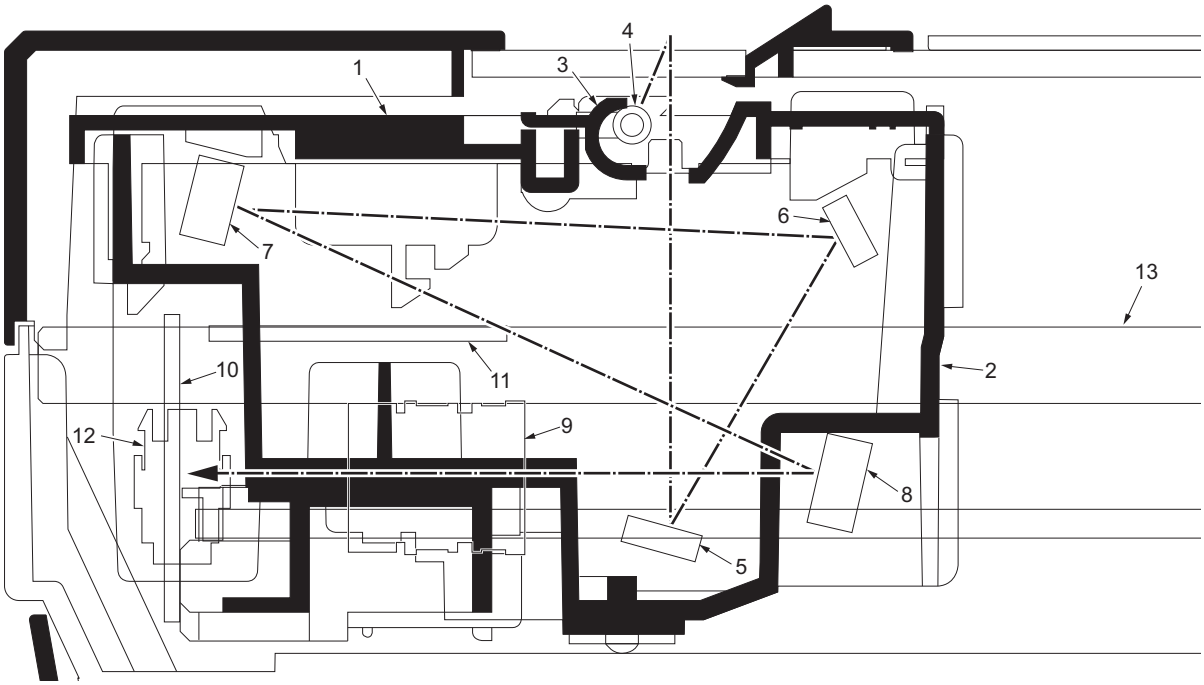

Figure 2-1-11Image scanner unit (ISU)

(1)	Lamp mount	(8)	Mirror D
(2)	ISU housing	(9)	ISU lens
(3)	ISU reflector	(10)	CCD PWB
(4)	Exposure lamp	(11)	Inverter PWB
(5)	Mirror A	(12)	Home position sensor
(6)	Mirror B	(13)	ISU shaft
(7)	Mirror C		

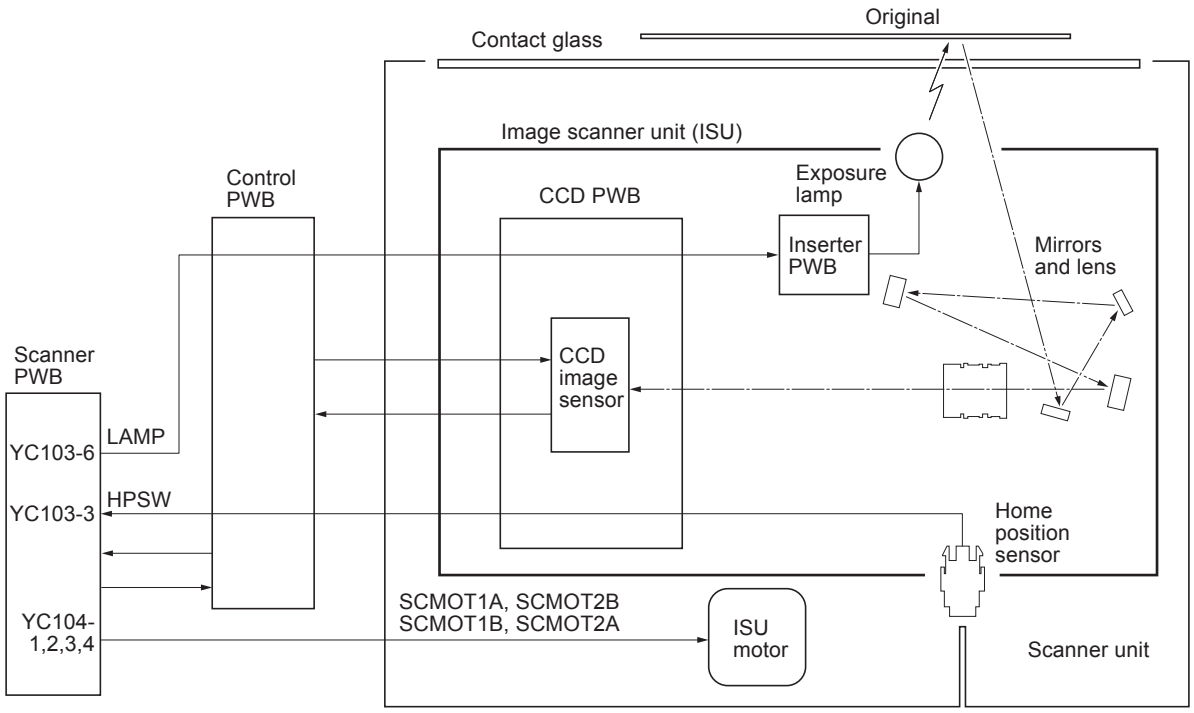

Figure 2-1-12 Scanner unit block diagram

(3) Laser scanner unit (LSU)

The charged surface of the drum is then scanned by the laser beam from the laser scanner unit.
The laser beam (780 nm wavelength) beam is dispersed as the polygon motor revolves to reflect the laser beam over the drum. Various lenses and mirror are housed in the laser scanner unit, adjust the diameter of the laser beam, and focalize it at the drum surface.

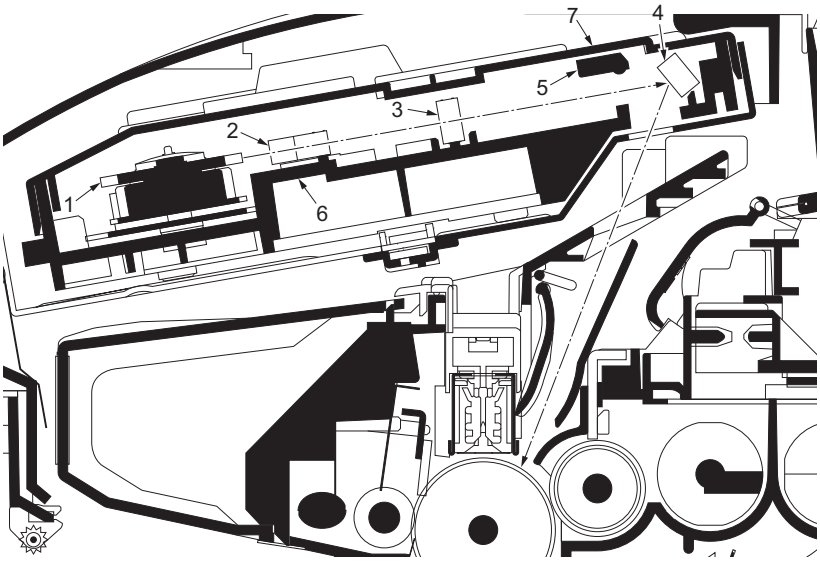

Figure 2-1-13 Laser scanner unit

(1) Polygon motor (mirror)
(2) F-θ lens
(3) F-θ lens
(4) LSU mirror
(5) LSU shutter
(6) LSU frame
(7) LSU cover

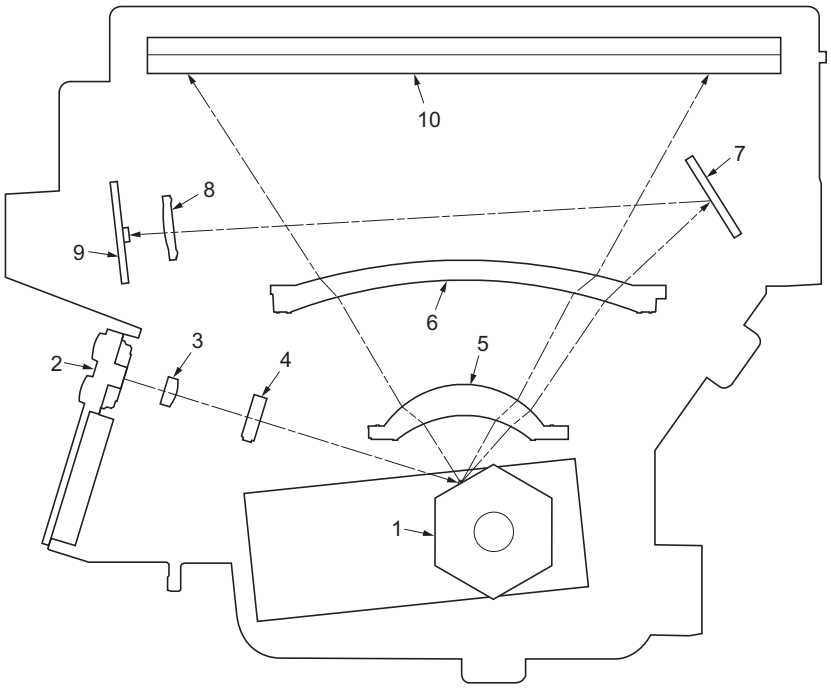

Figure 2-1-14 Laser scanner unit

(1) Polygon motor (mirror)
(2) Laser diode (APC PWB)
(3) Collimator lens
(4) Cylindrical lens
(5) F-θ lens
(6) F-θ lens
(7) PD mirror
(8) SOS lens
(9) Pin photo diode sensor (PD PWB)
(10) LSU mirror

2-1-4 Developing section

The latent image constituted on the drum is developed into a visible image. The developing roller contains a 3-pole (S-NS) magnet roller and an aluminum cylinder rotating around the magnet roller. Toner attracts to the magnet sleeve since it is powdery ink made of black resin bound to iron particles. Developing blade, magnetized by magnet, is positioned approximately 0.3 mm above the magnet sleeve to constitute a smooth layer of toner in accordance with the magnet sleeve revolution.

The developing roller is applied with the AC-weighted, positive DC power source. Toner on the magnet sleeve is given a positive charge. The positively charged toner is then attracted to the areas of the drum which was exposed to the laser light. (The gap between the drum and the magnet sleeve is approximately 0.32 mm.) The non-exposed areas of the drum repel the positively charged toner as these areas maintain the positive charge.
The developing roller is also AC-biased to ensure contrast in yielding by compensating the toner's attraction and repelling action during development.

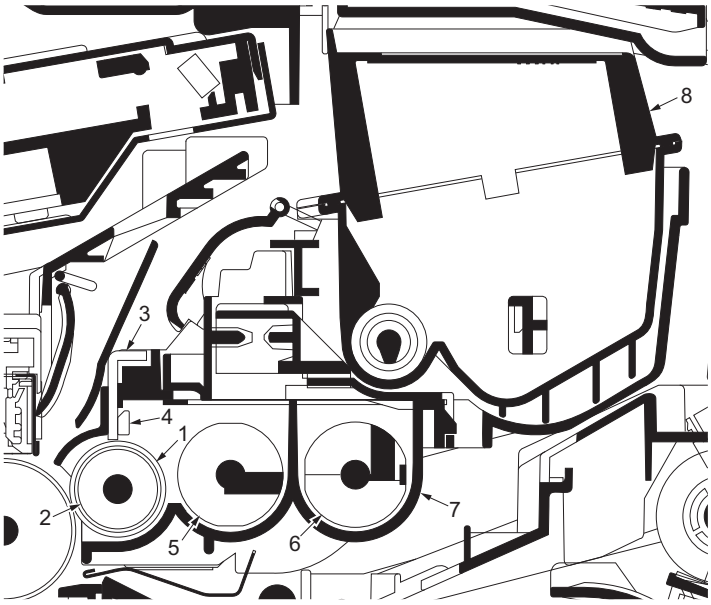

Figure 2-1-15Developing unit and toner container

(1)	Magnet sleeve	(5)	DLP screw A
(2)	Magnet roller	(6)	DLP screw B
(3)	Developing blade	(7)	DLP case
(4)	Blade magnet	(8)	Toner container

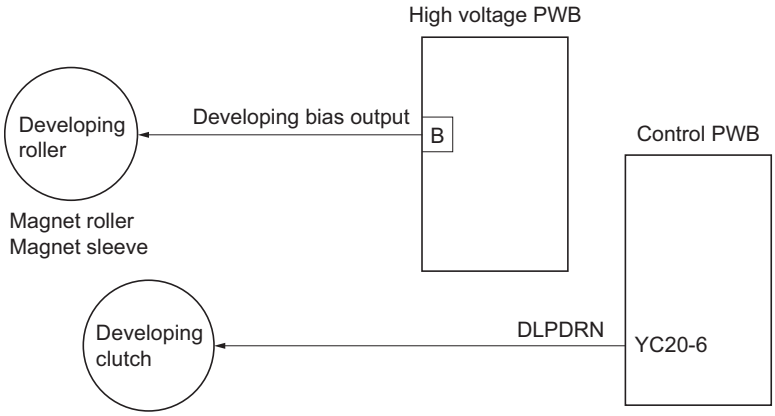

Figure 2-1-16 Developing section block diagram

2-1-5 Transfer/separation section

The transfer/separation section consists of the transfer roller, discharger brush and paper chute guide. A high voltage generated by the high voltage PWB is applied to the transfer roller for transfer charging. Paper after transfer is separated from the drum.

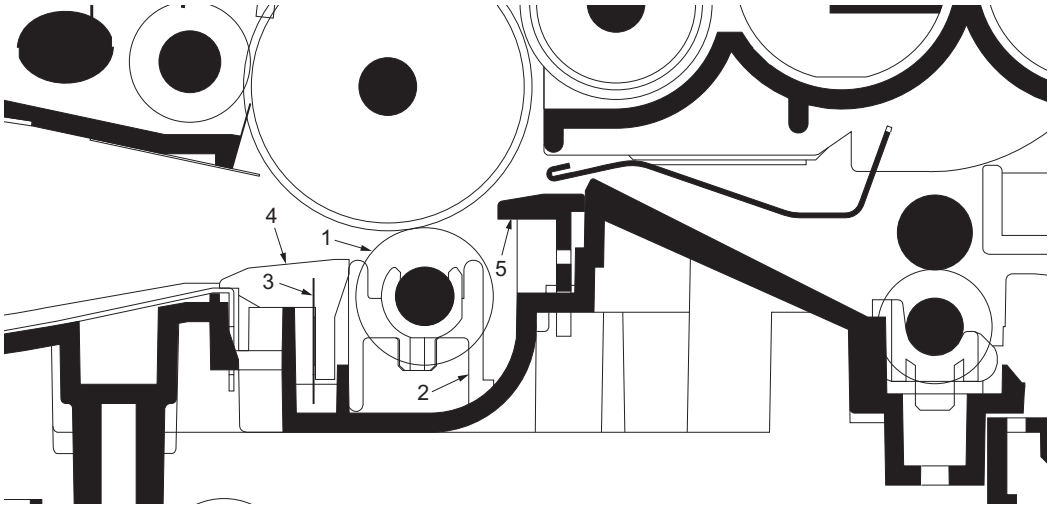

Figure 2-1-17 Transfer/separation section

(1) Transfer roller
(2) Transfer bushes
(3) Discharger brush
(4) DC brush holder
(5) Paper chute guide

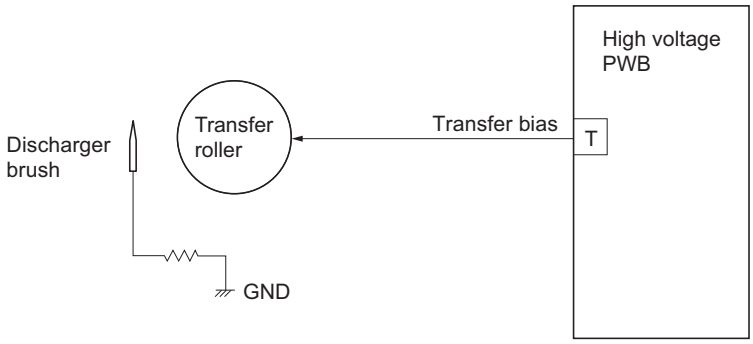

Figure 2-1-18 Transfer/separation section block diagram

2-1-6 Cleaning section

After the transferring process, the drum needs to be physically cleaned of toner which is residual after the development process. The cleaning blade is constantly pressed against the drum and scrapes the residual toner off to the sweep roller. The waste toner is collected at the output end of the sweep roller and sent back to the toner container, into the waste toner reservoir.
After the drum is physically cleaned, it then must be cleaned to the electrically neutral state. This is necessary to erase any residual positive charge, ready to accept the uniform charge for the next print process. The residual charge is canceled by exposing the drum to the light emitted from the eraser lamp (PWB). This lowers the electrical conductivity of the drum surface making the residual charge on the drum surface escape to the ground.

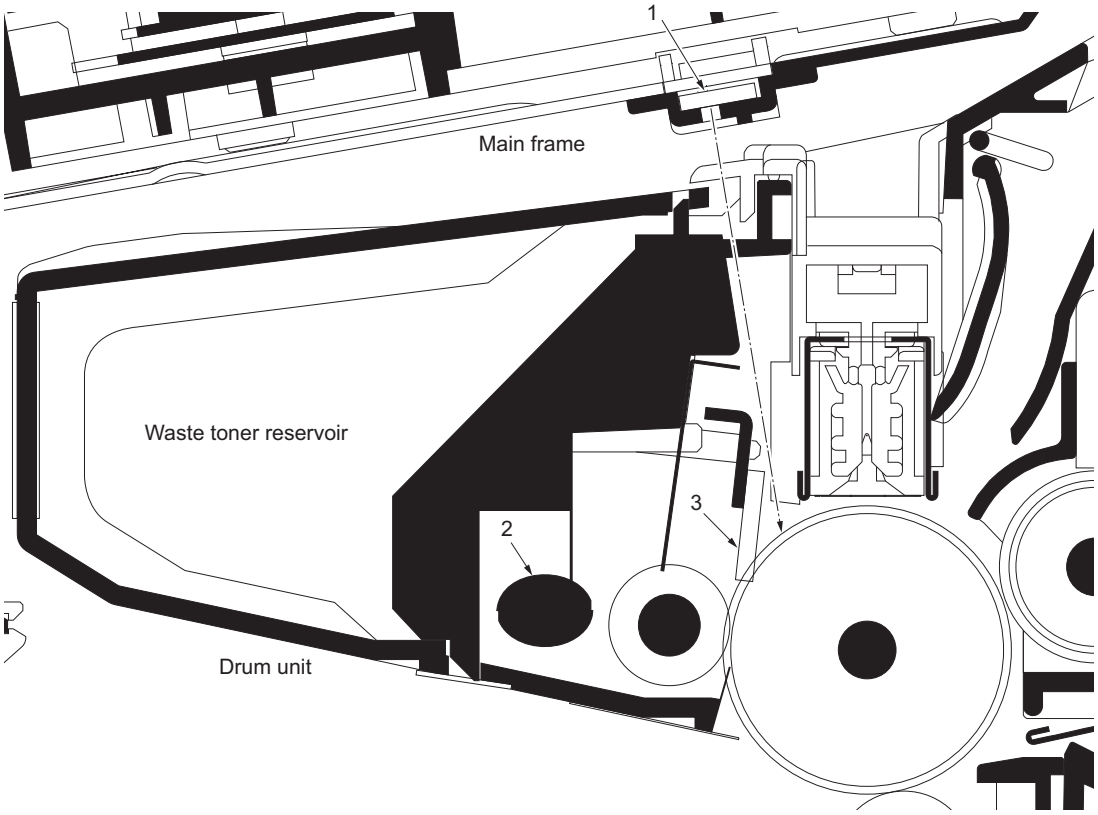

Figure 2-1-19 Cleaning section

(1) Eraser lamp (PWB)
(2) Sweep roller
(3) Cleaning blade

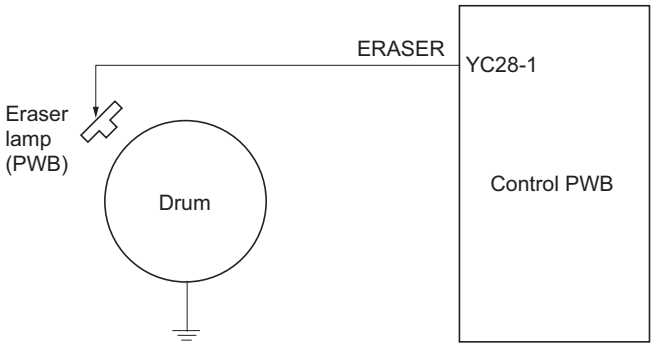

Figure 2-1-20 Cleaning section block diagram

2-1-7 Fuser section

The toner on the paper is molten and pressed into the paper as it passes between the heat roller and the press roller in the fuser unit. The heat roller has a heater lamp inside which continuously turns on and off by the fuser thermistor to maintain the constant temperature onto the heat roller surface. The heat roller is resin coated by florin to prevent toner from accumulating on the roller after a long run. Care must be taken while handling the heat roller not to scratch the roller surface as doing so may result in print problems. Fuser temperature is optimized to the paper type. The heat roller has four separators (claws) which are continuously in contact with its surface. These separators (claws) prevent the paper on which toner has been fused from being wound around the heat roller causing paper jam. The press roller is made of the heat-resistant silicon rubber. This roller is used to strongly press the paper towards the heat roller by means of press springs. The temperature of the heat roller is constantly monitored by the control PWB using the fuser thermistor. Should the temperature of the heat roller exceed the predetermined value, the fuser thermal cutout is activated to effectively disconnect the heater lamp from power.

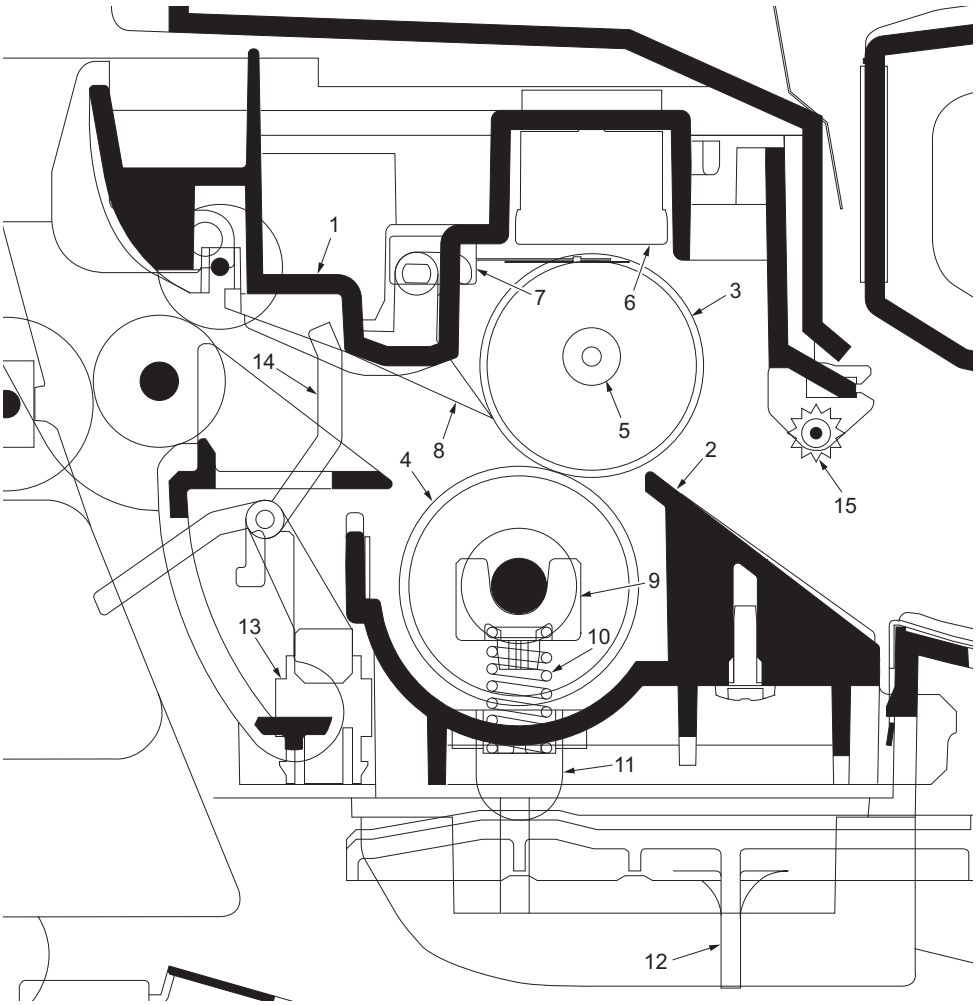

Figure 2-1-21 Fuser unit

(1) Upper fuser frame
(2) Lower fuser frame
(3) Heat roller
(4) Press roller
(5) Fuser heater lamp
(6) Fuser thermal cutout
(7) Fuser thermistor
(8) Separators
(9) Fuser bushes
(10) Press springs
(11) Press spring holders
(12) Fuser lever L (R)
(13) Exit sensor
(14) Actuator (exit sensor)
(15) Fuser guide pulley

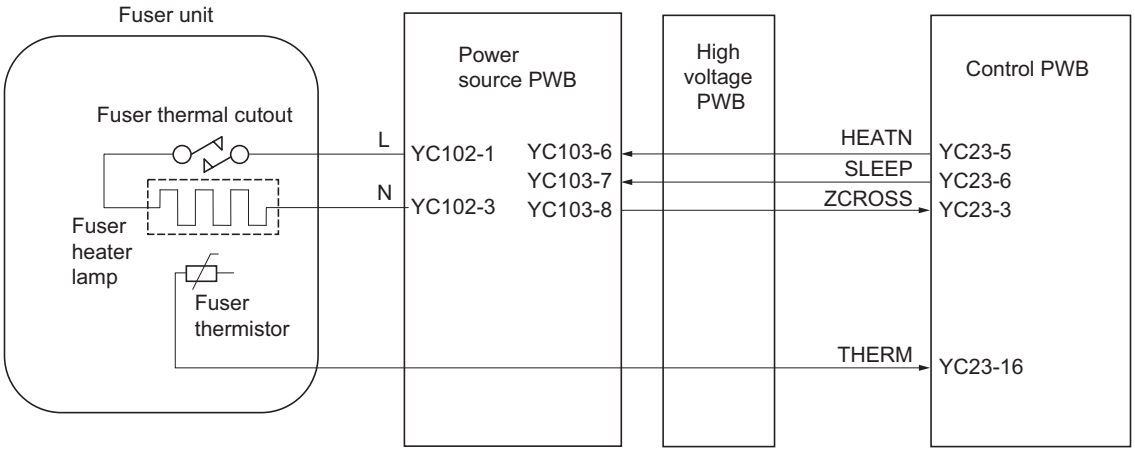

Figure 2-1-22 Fuser unit block diagram

2-1-8 Paper exit section

The paper exit section transports the paper which passed the fuser unit towards the top tray. The paper which passed through the fuser unit turns on the actuator (exit sensor) in the fuser unit, and is led by the guide comprised of the rear cover, frame and the FD cover guide, finally reaching the upper FD roller. The paper is delivered to the top tray by the rotation of the upper FD roller.

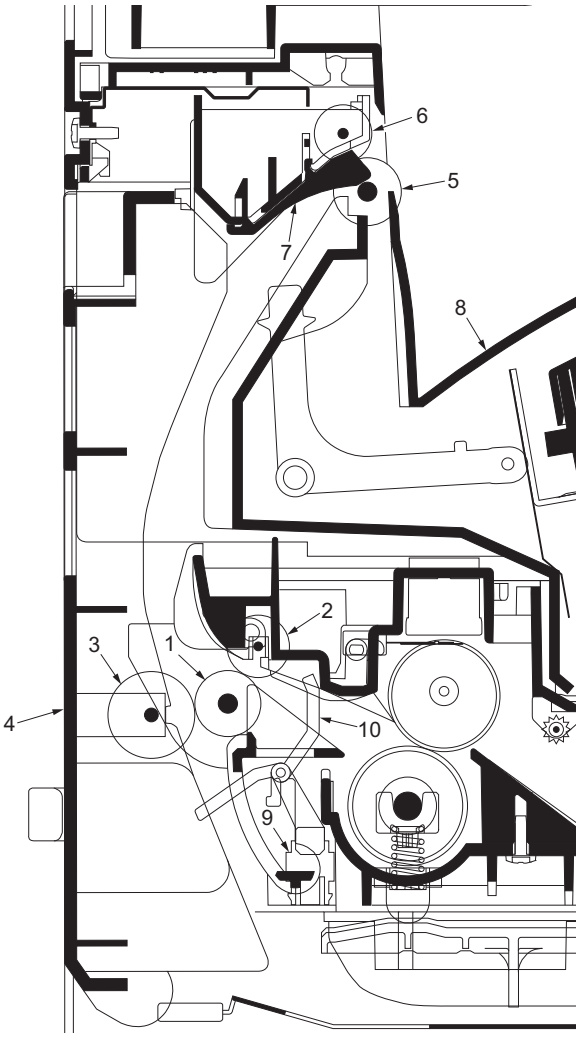

Figure 2-1-23 Paper exit section

(1) Exit roller
(2) Fuser exit pulley
(3) Middle pulley
(4) Rear cover
(5) Upper FD roller
(6) Exit pulley
(7) FD cover
(8) Top tray
(9) Exit sensor
(10) Actuator (exit sensor)

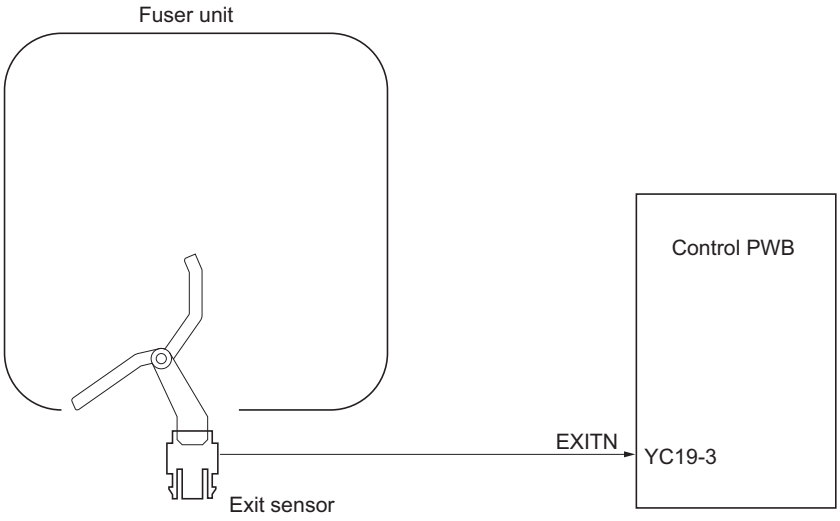

Figure 2-1-24 Paper exit section block diagram

2-1-9 Duplex/conveying section

The duplex/conveying section consists of conveying path which sends the paper sent from the exit section to the paper feed/conveying section when duplex printing.

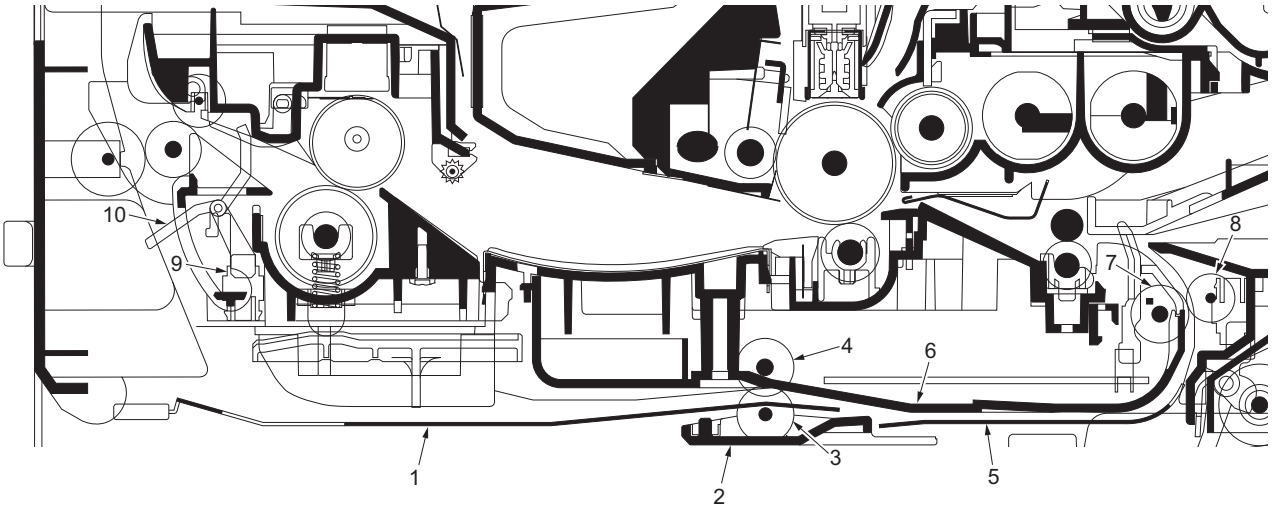

Figure 2-1-25 Duplex/conveying section

(1) DU cover B
(2) DU holder
(3) Middle pulley B
(4) DU roller
(5) DU cover A
(6) Lower base cover
(7) Feed roller
(8) Feed pulley
(9) Exit sensor
(10) Actuator (exit sensor)

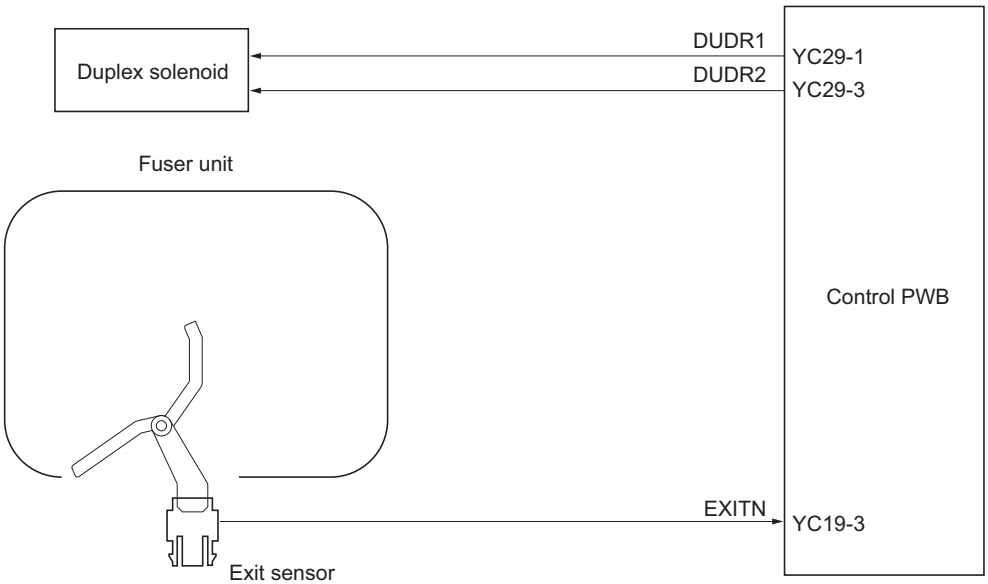

Figure 2-1-26 Duplex/paper conveying section block diagram

2-2-1 Electrical parts layout

(1) PWBs

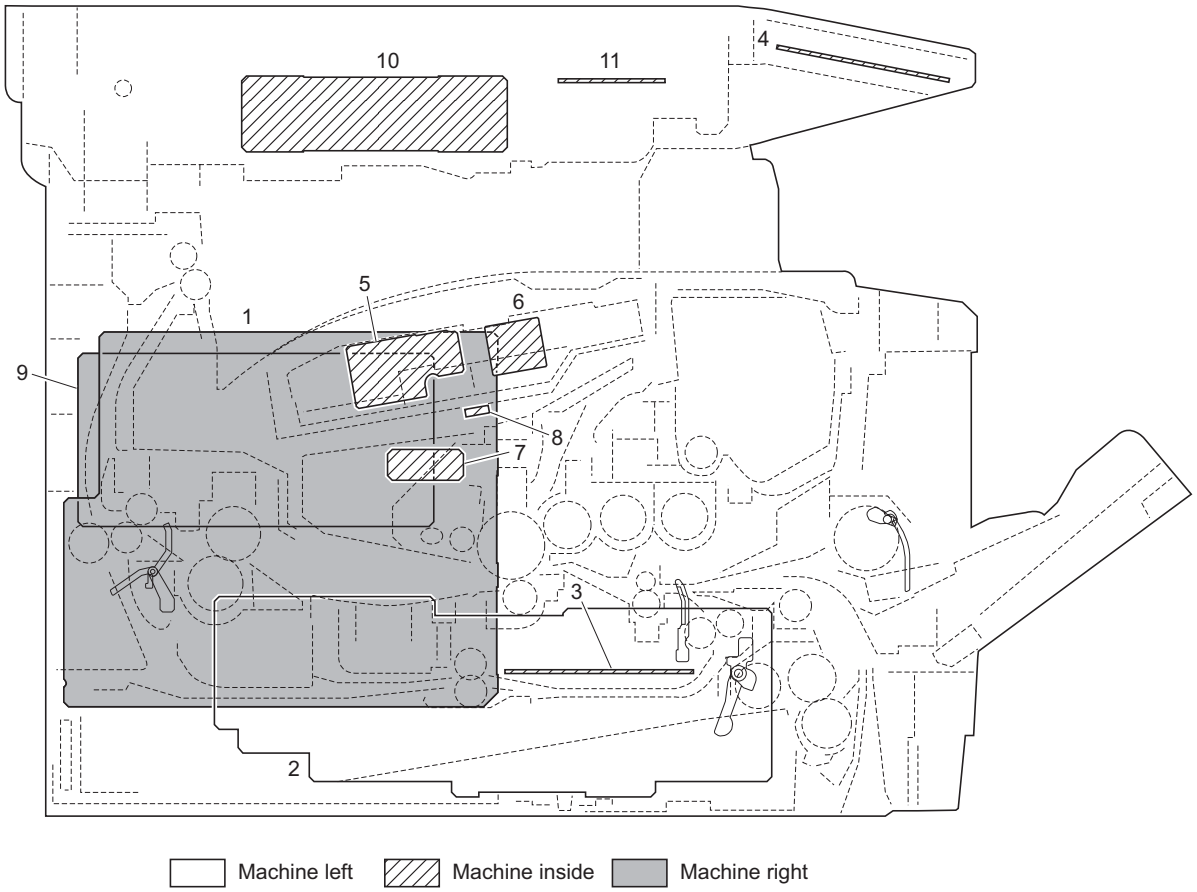

Figure 2-2-1 PWBs

1. Control PWB ..... Main controller: Controls the software such as the print data processing and provides the interface with computers.
   Engine: Controls printer hardware such as high voltage/bias output control, paper conveying system control, and fuser temperature control, etc.
2. Power source PWB..... After full-wave rectification of AC power source input, switching for converting to 24 V DC for output. Controls the fuser heater lamp.
3. High voltage PWB..... Generates main charging, developing bias and transfer bias.
4. Operation panel PWB ..... Consists the LCD, LED indicators and key switches.
5. APC PWB ..... Generates and controls the laser beam.
6. PD PWB..... Controls horizontal synchronizing timing of laser beam.
7. Zener PWB ..... Adjusts the drum surface potential.
8. Eraser lamp PWB ..... Eliminates the residual electrostatic charge on the drum.
9. Scanner PWB ..... Controls the scanner section.
10. CCD PWB..... Reads the image of originals.
11. Inverter PWB..... Controls the exposure lamp.

List of correspondences of PWB names

No.	Name used in service manual	Name used in parts list
1	Control PWB	PARTS MAIN PWB ASSY FS SP
1	Control PWB	PARTS MAIN PWB ASSY FS SP EU
2	Power source PWB	PARTS SWITCHING REGULATOR 120V SP
2	Power source PWB	PARTS SWITCHING REGULATOR 230V SP
3	High voltage PWB	HIGH VOLTAGE UNIT
4	Operation panel PWB	PARTS PANEL PWB ASSY SP
5	APC PWB	-
6	PD PWB	-
7	Zener PWB	-
8	Eraser lamp PWB	-
9	Scanner PWB	PARTS SCANNER PWB ASSY SP
10	CCD PWB	-
11	Inverter PWB	-

(2) Switches and sensors

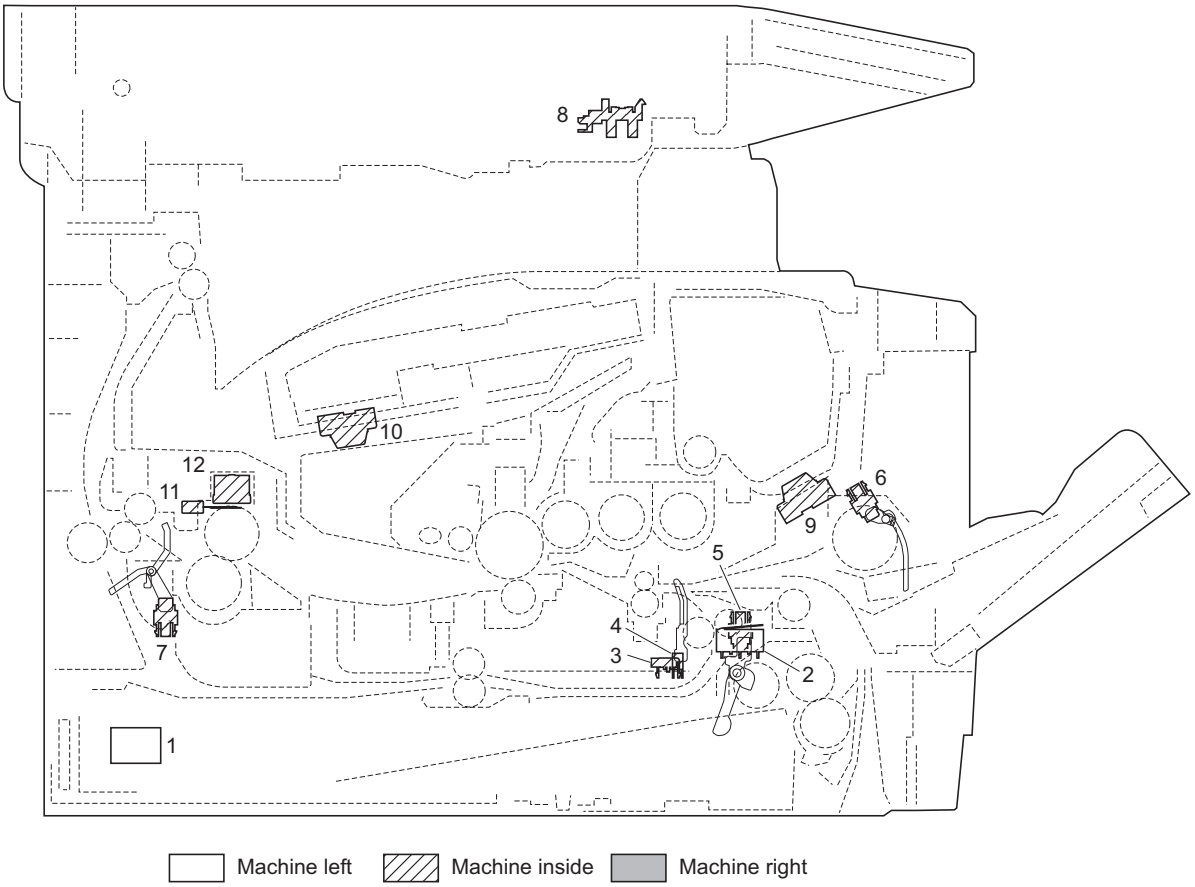

Figure 2-2-2 Switches and sensors

1. Main power switch ..... Turns ON/OFF the AC power source.
2. Interlock switch ..... Shuts off 24 V DC power line when the front cover is opened.
3. Cassette switch..... Detects open/close cassette.
4. Registration sensor..... Detects the timing of primary paper feed.
5. Paper sensor..... Detects the presence of paper in the cassette.
6. MP paper sensor..... Detects the presence of paper on the MP tray.
7. Exit sensor ..... Detects paper jam in the fuser or duplex conveying section.
8. Home position sensor ..... Detects the ISU in the home position.
9. Toner sensor ..... Detects the quantity of toner in a toner container.
10. Waste toner sensor..... Detects when the waste toner reservoir (Drum unit) is full.
11. Fuser thermistor..... Measures the heat roller temperature.
12. Fuser thermal cutout ..... Shuts off the power source to the fuser heater lamp when the heat roller reaches extremely high temperature.

(3) Other electrical components

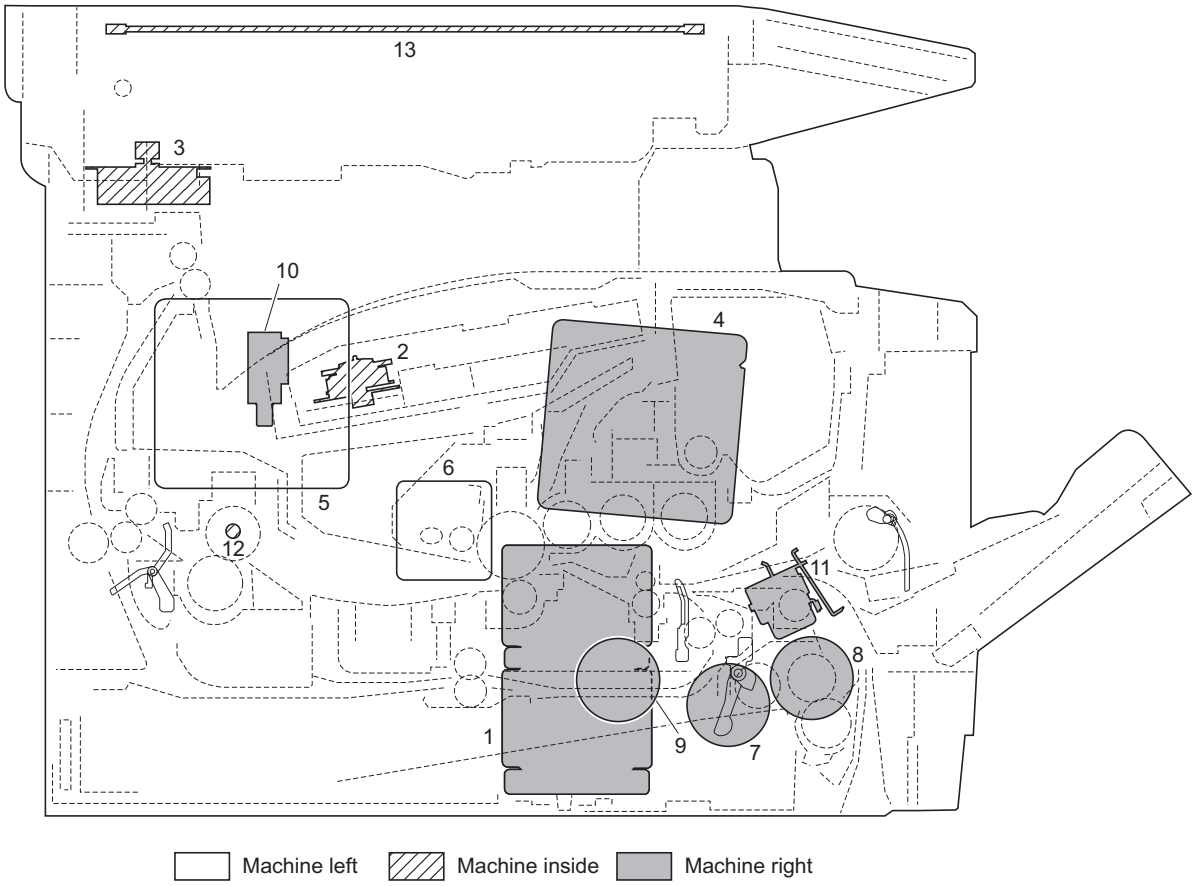

Figure 2-2-3 Other electrical components

1. Main motor ..... Drives the paper feed/conveying section and fuser unit.
2. Polygon motor ..... Drives the polygon mirror.
3. ISU motor ..... Drives the ISU.
4. Right cooling fan motor ..... Cools the interior of machine.
5. Left cooling fan motor ..... Cools the interior of machine.
6. Power source fan motor ..... Cools the interior of machine.
7. Registration clutch ..... Controls the secondary paper feed.
8. Paper feed clutch ..... Controls the paper cassette paper feed.
9. Developing clutch ..... Controls the toner feed.
10. Duplex solenoid ..... Controls the paper conveying at the duplex conveying section.
11. MP paper feed solenoid ..... Controls the MPF bottom plate of the MP tray.
12. Fuser heater lamp ..... Heats the heat roller.
13. Exposure lamp ..... Exposes originals.

2-3-1 Power source PWB

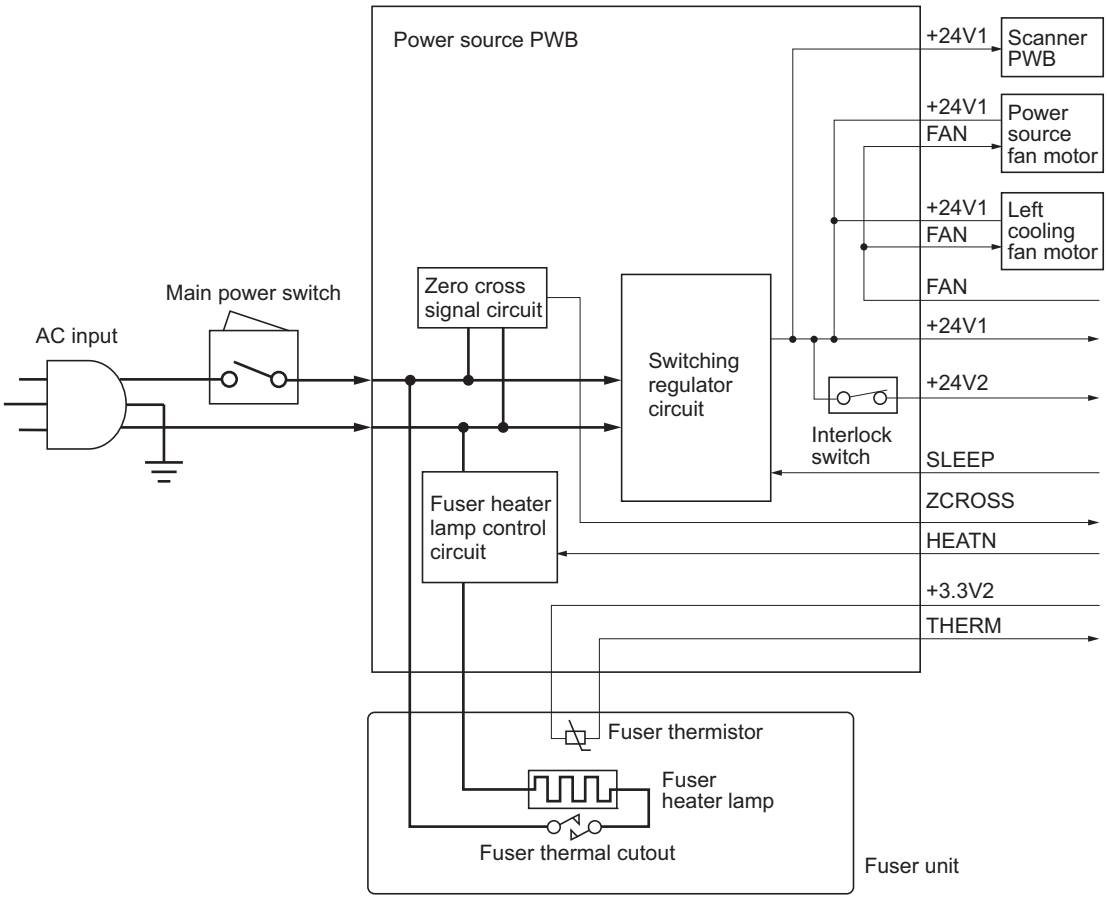

Figure 2-3-1 Power source PWB block diagram

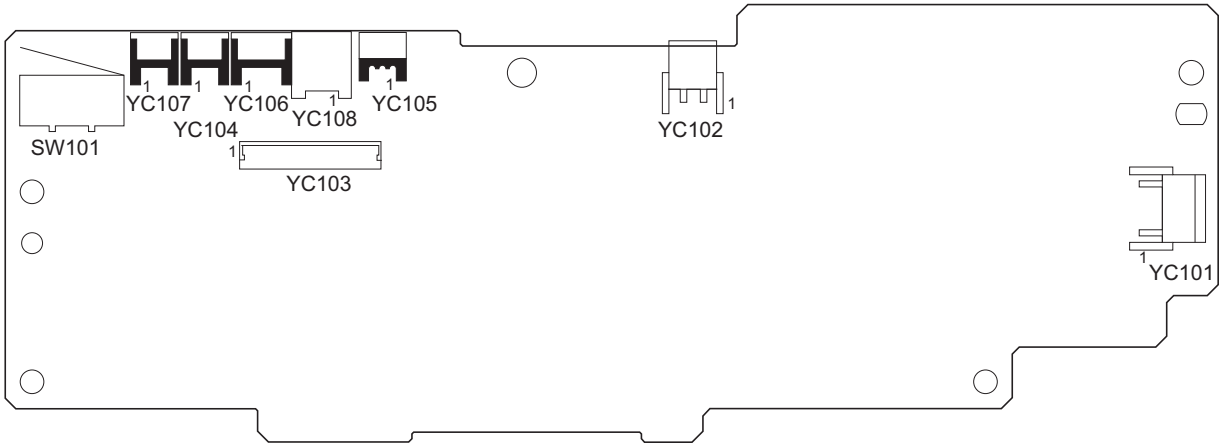

Figure 2-3-2 Power source PWB silk-screen diagram

Connector	Pin	Signal	I/O	Voltage	Description
YC101	1	NEUTRAL	I	120 V AC 220 - 240 V AC	AC power input
Connected to the AC inlet	2	LIVE	I	120 V AC 220 - 240 V AC	AC power input
YC102	1	LIVE	O	120 V AC 220 - 240 V AC	Fuser heater lamp output
Connected to the fuser heater lamp	2	NEUTRAL	O	120 V AC 220 - 240 V AC	Fuser heater lamp output
YC103	1	+24V1	O	24 V DC	24 V DC power source
Connected to the high voltage PWB	2	SGND	-	-	Ground
	3	FAN	I	0/24 V DC	Left cooling fan motor: On/Off
	4	THERM	O	Analog	Fuser thermistor detection voltage
	5	+3.3V1	I	3.3 V DC	3.3 V DC power source
	6	HEATN	I	0/3.3 V DC	Fuser heater lamp: On/Off
	7	SLEEP	I	0/3.3 V DC	Sleep mode signal: On/Off
	8	ZCROSS	O	0/3.3 V DC (pulse)	Zero cross signal
	9	+24V2	O	24 V DC	24 V DC power source (via interlock switch)
	10	+24V2	O	24 V DC	24 V DC power source (via interlock switch)
	11	PGND	-	-	Ground
	12	PGND	-	-	Ground
YC104	1	+24V1	O	24 V DC	24 V DC power source
Connected to the left cooling fan motor	2	FAN	O	0/24 V DC	Left cooling fan motor: On/Off
YC105	1	+3.3V1	O	3.3 V DC	3.3 V DC power source
Connected to the fuser thermistor	2	N.C.	-	-	Not used
	3	THERM	I	Analog	Fuser thermistor detection voltage
YC106	1	+24V1	O	24 V DC	24 V DC power source
Connected to the scan-ner PWB	2	N.C.	-	-	Not used
	3	GND	-	-	Ground
YC107	1	+24V1	O	24 V DC	24 V DC power source
Connected to the power source fan motor	2	FAN	O	0/24 V DC	Power source fan motor: On/Off
YC108	1	-	-	-	Frame ground (Control PWB)
Connected to the ground ter-minals	2	-	-	-	Frame ground (Frame)
	3	-	-	-	Frame ground (Frame)

2-3-2 Control PWB

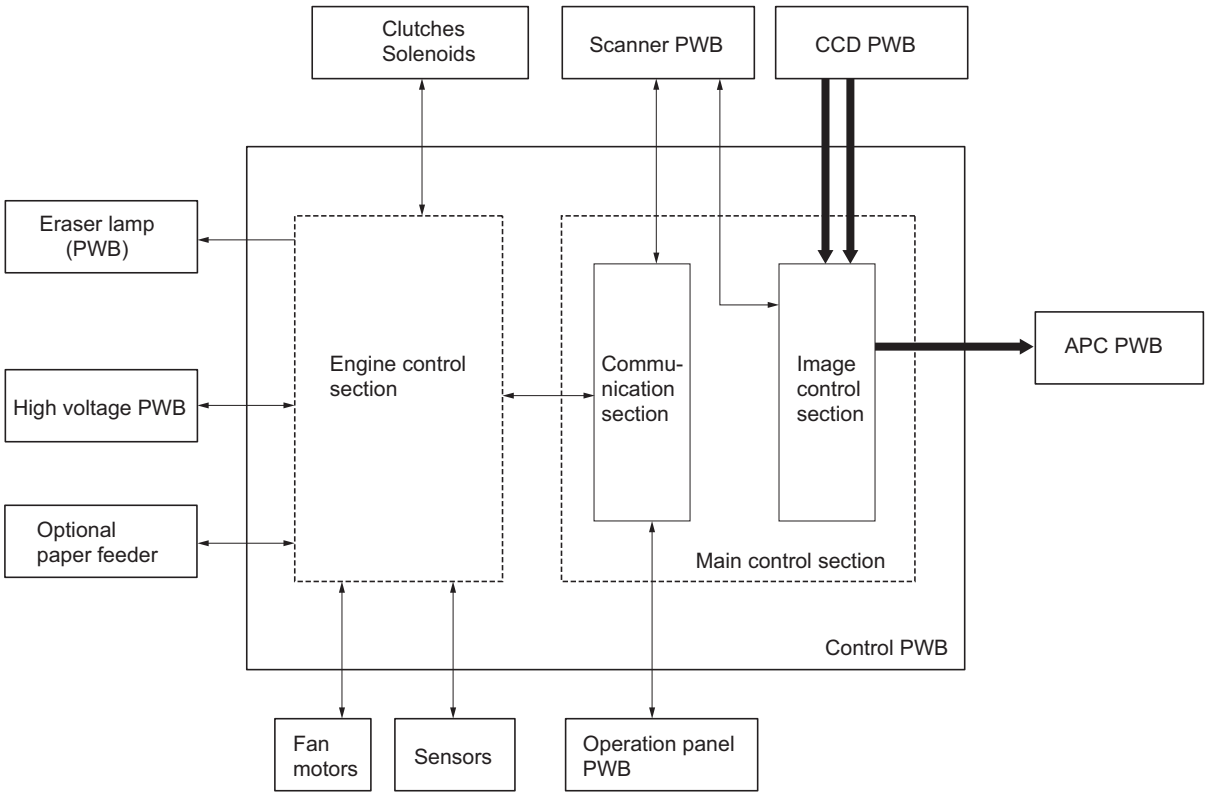

Figure 2-3-3 Control PWB block diagram

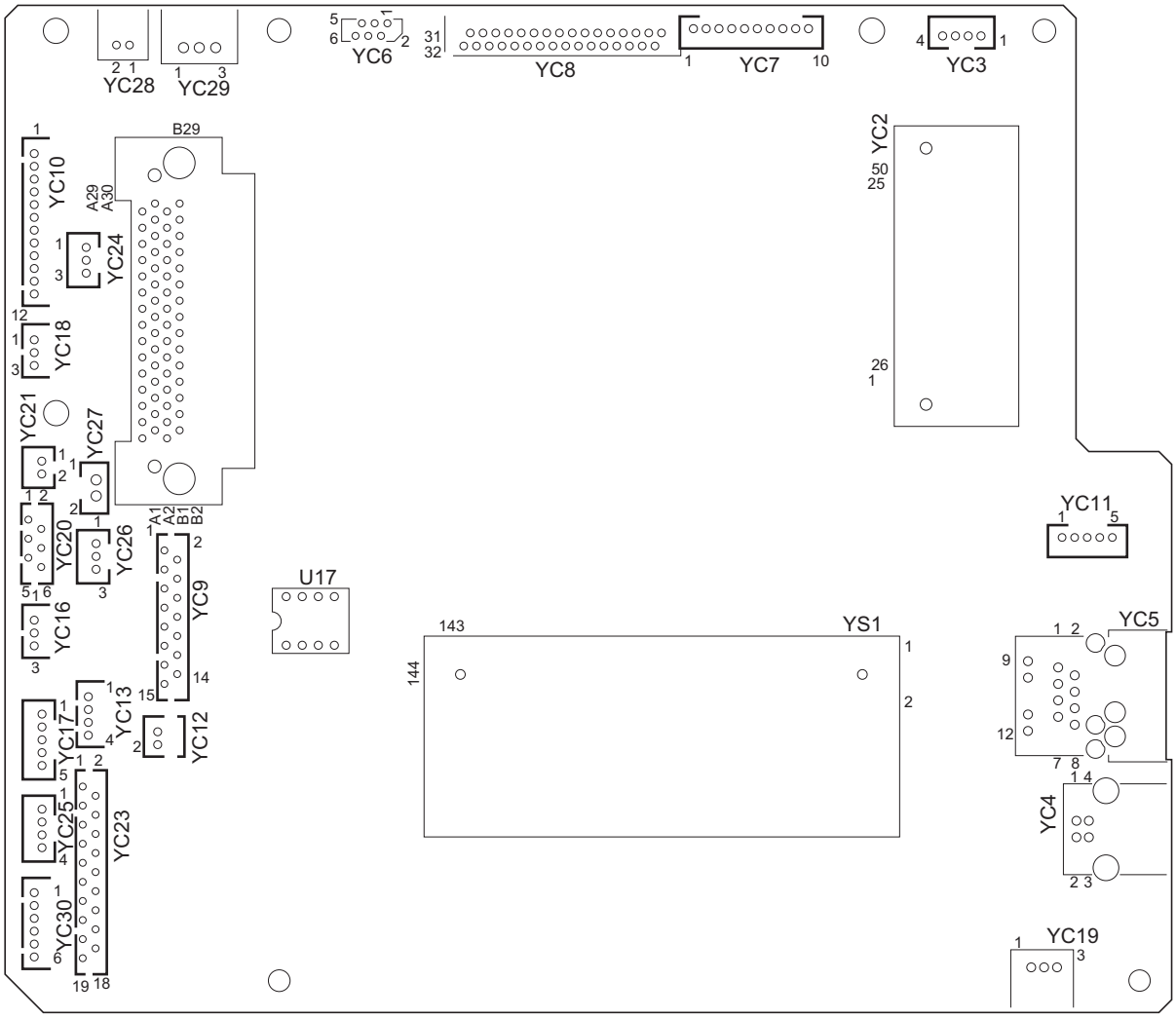

Figure 2-3-4 Control PWB silk-screen diagram

Connector	Pin	Signal	I/O	Voltage	Description
YC6	1	+12V	O	12 V DC	12 V DC power source
Connected to the scanner PWB	2	GND	-	-	Ground
	3	HPSW	O	0/3.3 V DC	Home position sensor: On/Off
	4	GND	-	-	Ground
	5	NC	-	-	Not used
	6	LAMP	I	0/24 V DC	Exposure lamp drive signal
YC7	1	GND	-	-	Ground
Connected to the operation panel PWB	2	PANCTS	I	0/3.3 V DC (pulse)	Transmitting enable signal
	3	PANRTS	O	0/3.3 V DC (pulse)	Receiving enable signal
	4	+3.3V1	O	0/3.3 V DC	Home position sensor: On/Off
	5	PANRXD	I	0/3.3 V DC (pulse)	Operation panel PWB receiving data
	6	PANTXD	O	0/3.3 V DC (pulse)	Operation panel PWB transmitting data
	7	FPRSTN	O	3.3/0 V DC	Operation panel PWB reset signal
	8	GND	-	-	Ground
	9	POWERKEY	I	3.3/0 V DC	Power key input signal
	10	+5V1	O	5 V DC	5 V DC power source
YC8	1	LAMP	O	0/24 V DC	Exposure lamp drive signal
Connected to the CCD PWB	2	NC	-	-	Not used
	3	GND	-	-	Ground
	4	GND	-	-	Ground
	5	HPSW	I	0/3.3 V DC	Home position sensor: On/Off
	6	+3.3V1	O	3.3 V DC	3.3 V DC power source
	7	NC	-	-	Not used
	8	CCDRSN	O	LVDS	CCD reset signal (-)
	9	CCDRSP	O	LVDS	CCD reset signal (+)
	10	NC	-	-	Not used
	11	CCDCLPP	O	LVDS	CCD reset signal (-)
	12	CCDCLPN	O	LVDS	CCD reset signal (+)
	13	NC	-	-	Not used
	14	CCDPH1N	O	LVDS	CCD shift register clock signal (-)
	15	CCDPH1P	O	LVDS	CCD shift register clock signal (+)
	16	NC	-	-	Not used
	17	CCDPH2N	O	LVDS	CCD shift register clock signal (-)
	18	CCDPH2P	O	LVDS	CCD shift register clock signal (+)
	19	NC	-	-	Not used
	20	CCDSH	O	LVDS	CCD shift gate signal (-)
	21	CCDSW	O	LVDS	CCD color/BW change signal (+)
	22	GND	-	-	Ground
	23	CCDDATAR	I	LVDS	CCD image output signal (Red)
	24	GND	-	-	Ground
	25	CCDDATAG	I	LVDS	CCD image output signal (Green)
	26	GND	-	-	Ground
	27	CCDDATAB	I	LVDS	CCD image output signal (Blue)
	28	GND	-	-	Ground
	29	+12V	O	12 V DC	12 V DC power source (For exposure lamp)
	30	GND	-	-	Ground
	31	+5V1	O	5 V DC	5 V DC power source
	32	+5V1	O	5 V DC	5 V DC power source

Connector	Pin	Signal	I/O	Voltage	Description
YC9	1	GND	-	-	Ground
Connected to the scanner PWB	2	+3.3V1	O	3.3 V DC	3.3 V DC power source
	3	CPUCLK	I	0/3.3 V DC (pulse)	Serial communications clock signal
	4	CPUSI	I	0/3.3 V DC (pulse)	Serial communications data input
	5	CPUSO	O	0/3.3 V DC (pulse)	Serial communications data output
	6	CPUSEL	I	0/3.3 V DC	Communications select signal
	7	CPURDY	O	0/3.3 V DC	Communications ready signal
	8	OVMONOUT	O	0/3.3 V DC	Communications ready signal
	9	PAGESET	O	0/3.3 V DC	Vertical synchronizing monitor signal
	10	SEGSO	I	0/3.3 V DC	Vertical synchronizing signal
	11	SSCKN	O	0/3.3 V DC (pulse)	Serial communications clock
	12	SEGSI	O	0/3.3 V DC (pulse)	Serial communications data input
	13	SSBSY	I	0/3.3 V DC	Impossible transmission/Completion notice signal
	14	SSDIR	I	0/3.3 V DC	Serial communications T/R switching signal
	15	SEGIR	I	0/3.3 V DC	Serial communications interruption demand signal
YC10	1	+24V3	O	24 V DC	24 V DC power source
Connected to the laser scanner unit	2	GND	-	-	Ground
	3	PLGDRN	O	0/3.3 V DC	Polygon motor: On/Off
	4	PLGRDY	I	0/3.3 V DC	Polygon motor ready signal
	5	PLGCLK	O	0/3.3 V DC (pulse)	Polygon motor clock signal
	6	PDN	I	0/3.3 V DC (pulse)	Horizontal synchronizing signal
	7	GND	-	-	Ground
	8	VDON	O	0/3.3 V DC (pulse)	Video data signal (+)
	9	VDOP	O	0/3.3 V DC (pulse)	Video data signal (-)
	10	OUTPEN	O	0/3.3 V DC	Laser output enable signal
	11	SAMPLEN	O	0/3.3 V DC	Sample/hold timing switching signal
	12	+3.3V1	O	3.3 V DC	3.3 V DC power source
YC16	1	PILED	O	3.3 V DC	3.3 V DC power source
Connected to the MP paper sensor	2	GND	-	-	Ground
	3	HANDSN	I	0/3.3 V DC	MP paper sensor: On/Off
YC17	1	+24V3	O	24 V DC	24 V DC power source
Connected to the main motor	2	GND	-	-	Ground
	3	MMOTRDYN	I	0/3.3 V DC	Main motor ready signal
	4	MMOTCLK	O	0/3.3 V DC (pulse)	Main motor clock signal
	5	REMOTEN	O	0/3.3 V DC	Main motor: On/Off
YC18	1	PILED	O	3.3 V DC	3.3 V DC power source
Connected to the paper sensor	2	GND	-	-	Ground
	3	PAPER	I	0/3.3 V DC	Paper sensor: On/Off
YC19	1	PILED	O	3.3 V DC	3.3 V DC power source
Connected to the exit sensor	2	GND	-	-	Ground
	3	EXITN	I	0/3.3 V DC	Exit sensor: On/Off

Connector	Pin	Signal	I/O	Voltage	Description
YC20	1	+24V3	O	24 V DC	24 V DC power source
Connected to the regis-tration clutch, paper feed clutch and developing clutch	2	REGDRN	O	0/24 V DC	Registration clutch: On/Off
	3	+24V3	O	24 V DC	24 V DC power source
	4	FEDDRN	O	0/24 V DC	Paper feed clutch: On/Off
	5	+24V3	O	24 V DC	24 V DC power source
	6	DLPDRN	O	0/24 V DC	Developing clutch: On/Off
YC21	1	+24V3	O	24 V DC	24 V DC power source
Connected to the MP paper feed solenoid	2	MPFDRN	O	0/24 V DC	MP paper feed solenoid: On/Off
YC23	1	+24V1	I	24 V DC	24 V DC power source
Connected to the high voltage PWB	2	+3.3V1	O	3.3 V DC	3.3 V DC power source
	3	ZCROSS	I	0/3.3 V DC (pulse)	Zero cross signal
	4	FAN	O	0/24 V DC	Left cooling fan motor: On/Off
	5	HEATN	O	0/3.3 V DC	Fuser heater lamp: On/Off
	6	SLEEP	O	0/3.3 V DC	Sleep mode signal: On/Off
	7	MHVDR	O	0/3.3 V DC	Main charger output signal: On/Off
	8	RTHVDR	O	0/3.3 V DC	Transfer (reverse) bias output signal: On/Off
	9	PSEL1	O	0/3.3 V DC	Transfer (reverse) bias control signal: On/Off
	10	HVCLK	O	0/3.3 V DC (pulse)	Developing bias clock signal
	11	REGN	I	0/3.3 V DC	Registration sensor: On/Off
	12	TCNT	O	PWM	Transfer current control signal
	13	MCNT	O	PWM	Main charger output control signal
	14	THVDR	O	0/3.3 V DC	Transfer bias output signal: On/Off
	15	CASE	I	Analog	Cassette switch: On/Off
	16	THERM	I	Analog	Fuser thermistor detection voltage
	17	+24V3	O	24 V DC	24 V DC power source
	18	SGND	-	-	Ground
	19	SEPA	-	-	-
YC24	1	+3.3V1	O	3.3 V DC	3.3 V DC power source
Connected to the waste toner sensor	2	TNFULL	I	0/3.3 V DC	Waste toner full detection signal
	3	SGND	-	-	Ground
YC25	1	+24V2	I	24 V DC	24 V DC power source
Connected to the high voltage PWB	2	+24V2	I	24 V DC	24 V DC power source
	3	PGND	-	-	Ground
	4	PGND	-	-	Ground
YC26	1	+3.3V1	O	3.3 V DC	3.3 V DC power source
Connected to the toner sensor	2	TEMPTY	I	0/3.3 V DC	Toner quantity detection signal
	3	SGND	-	-	Ground
YC27	1	+24V1	O	24 V DC	24 V DC power source
Connected to the right cooling fan motor	2	FAN	O	0/24 V DC	Right cooling fan motor: On/Off

Connector	Pin	Signal	I/O	Voltage	Description
YC28	1	ERASER	O	0/24 V DC	Eraser lamp: On/Off
Connected to the eraser lamp	2	ERASRW	O	24 V DC	24 V DC power source
YC29	1	DUDR1	O	0/24 V DC	Duplex solenoid (activate): On/Off
Connected to the duplex sole-noid	2	COMMON	O	24 V DC	24 V DC power source
	3	DUDR2	O	0/24 V DC	Duplex solenoid (return): On/Off
YC30	1	+24V3	O	24 V DC	24 V DC power source
Connected to the optional paper feeder (PF main PWB)	2	PGND	-	-	Ground
	3	PFSI	I	0/3.3 V DC (pulse)	Serial communication data input signal
	4	PFSO	O	0/3.3 V DC (pulse)	Serial communication data output signal
	5	PSEL	O	0/3.3 V DC	Paper feeder selection signal
	6	+3.3V1	O	3.3 V DC	3.3 V DC power source

2-3-3 Scanner PWB

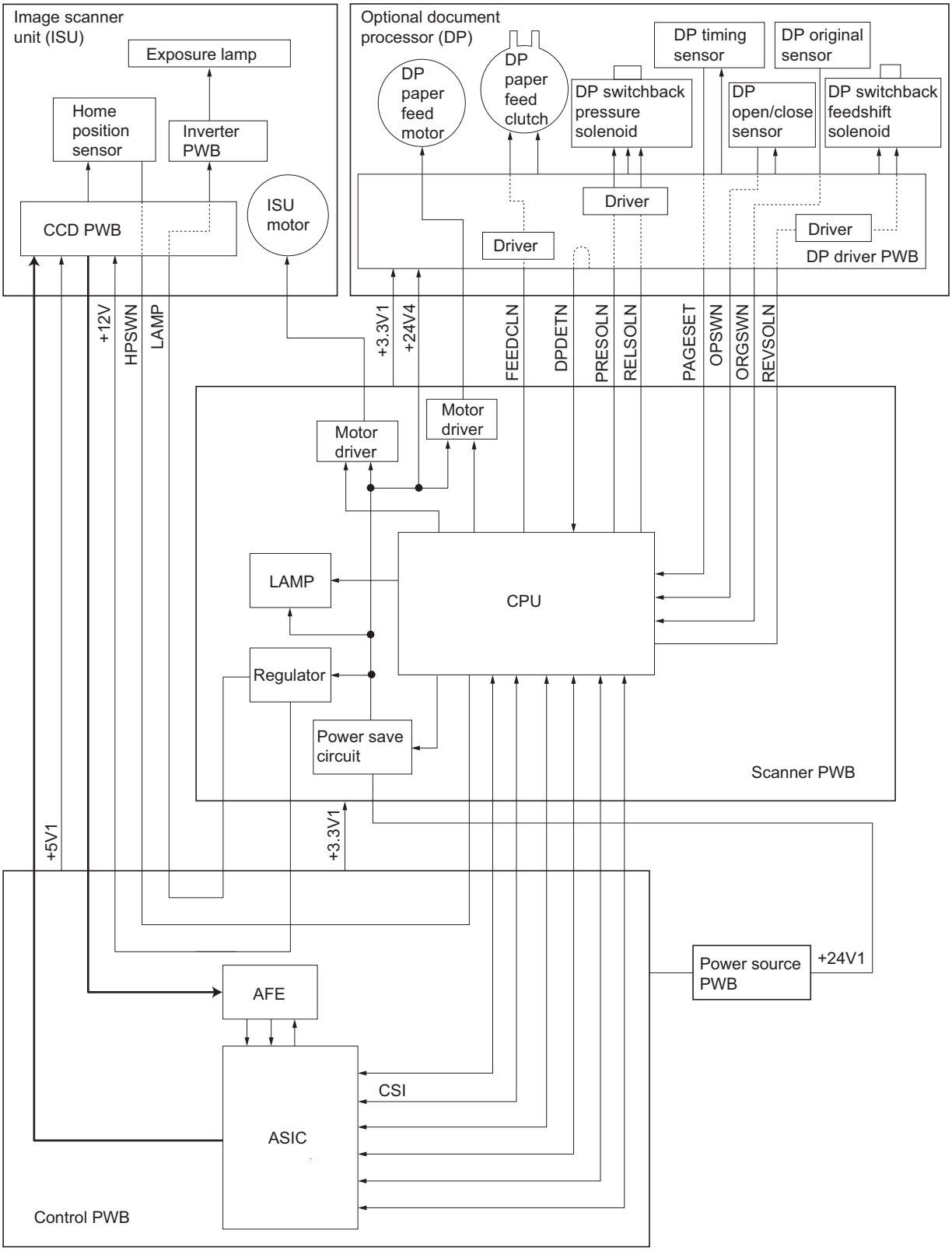

Figure 2-3-5Scanner PWB block diagram

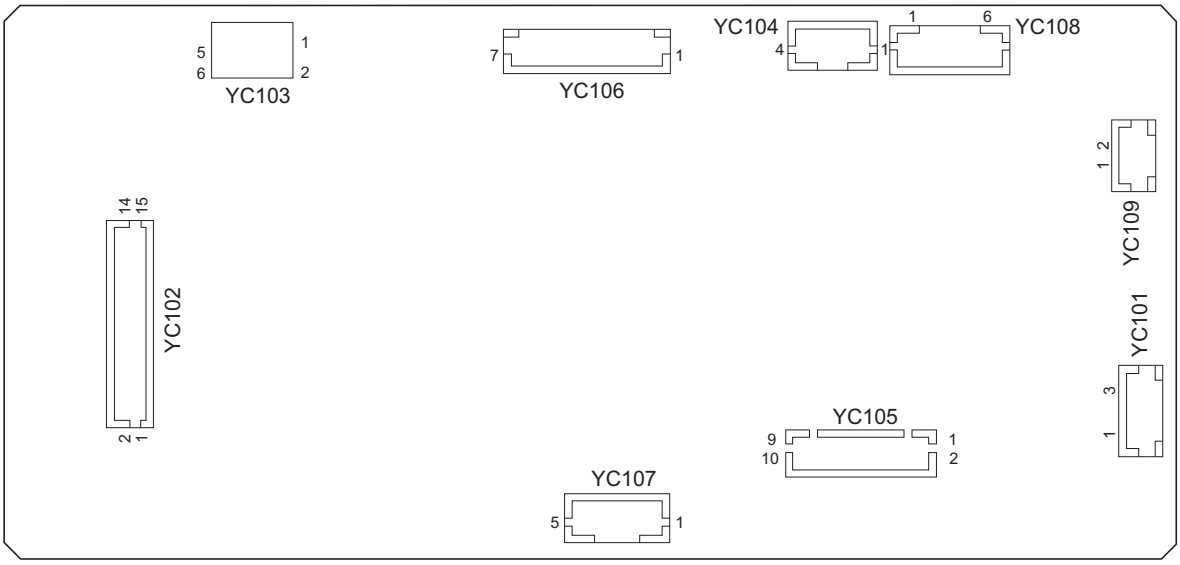

Figure 2-3-6Scanner PWB silk-screen diagram

Connector	Pin	Signal	I/O	Voltage	Description
YC101	1	+24V1	O	24 V DC	24 V DC power source
Connected to the power source PWB	2	N.C.	-	-	Not used
	3	GND	-	-	Ground
YC102	1	SEGIR	O	0/3.3 V DC	Serial communications interruption demand
Connected to the control PWB	2	SSDIR	O	0/3.3 V DC	Serial communications trans./recep. change
	3	SSBSY	O	0/3.3 V DC	Impossible transmission/Completion notice
	4	SEGSI	I	0/3.3 V DC (pulse)	Serial communications data output
	5	SSCKN	I	0/3.3 V DC (pulse)	Serial communications clock
	6	SEGSO	O	0/3.3 V DC	Vertical synchronizing signal
	7	PAGESET	I	0/3.3 V DC	Vertical synchronizing monitor signal
	8	OVMONOUT	I	0/3.3 V DC	Communications ready signal
	9	CPURDY	I	0/3.3 V DC	Communications ready signal
	10	CPUSEL	O	0/3.3 V DC	Communications select signal
	11	CPUSO	I	0/3.3 V DC (pulse)	Serial communications data input
	12	CPUSI	O	0/3.3 V DC (pulse)	Serial communications data output
	13	CPUCLK	O	0/3.3 V DC (pulse)	Serial communications clock signal
	14	+3.3V1	I	3.3 V DC	3.3 V DC power source
	15	GND	-	-	Ground
YC103	1	+12V	I	12 V DC	12 V DC power source
Connected to the control PWB	2	GND	-	-	Ground
	3	HPSW	I	0/3.3 V DC	Home position sensor: On/Off
	4	GND	-	-	Ground
	5	NC	-	-	Not used
	6	LAMP	I	0/24 V DC	Exposure lamp drive signal
YC104	1	SCMOT1A	O	0/24 V DC (pulse)	ISU motor drive pulse
Connected to the ISU motor	2	SCMOT2B	O	0/24 V DC (pulse)	ISU motor drive pulse
	3	SCMOT1B	O	0/24 V DC (pulse)	ISU motor drive pulse
	4	SCMOT2A	O	0/24 V DC (pulse)	ISU motor drive pulse

Connector	Pin	Signal	I/O	Voltage	Description
YC105	1	+3.3V1	O	3.3 V DC	3.3 V DC power source
Connected to the optional DP (DP driver PWB)	2	GND	-	-	Ground
	3	TIMSWN	I	0/3.3 V DC	DP timing sensor: On/Off
	4	ORGSWN	I	0/3.3 V DC	DP original sensor: On/Off
	5	OPSWN	I	0/3.3 V DC	DP open/close sensor: On/Off
	6	DPDETN	I	0/3.3 V DC	DP installation detection signal
	7	RELSOLN	O	0/24 V DC	DP switchback pressure solenoid: (Release) On/Off
	8	PRESOLN	O	0/24 V DC	DP switchback pressure solenoid (Press.): On/Off
	9	REVSOL	O	0/24 V DC	DP switchback feedshift solenoid: On/Off
	10	FEEDCL	O	0/24 V DC	DP paper feed clutch: On/Off
YC108	1	MOT1A	O	0/24 V DC (pulse)	DP paper feed motor drive pulse
Connected to the optional DP (DP driver PWB)	2	MOT2B	O	0/24 V DC (pulse)	DP paper feed motor drive pulse
	3	MOT1B	O	0/24 V DC (pulse)	DP paper feed motor drive pulse
	4	MOT2A	O	0/24 V DC (pulse)	DP paper feed motor drive pulse
	5	+24V4	O	24 V DC	24 V DC power source
	6	GND	-	-	Ground
YC109	1	+24V4	O	24 V DC	24 V DC power source
Connected to the optional DP (DP driver PWB)	2	GND	-	-	Ground

This page is intentionally left blank.

2-4-1 Appendixes

(1) Wiring diagram

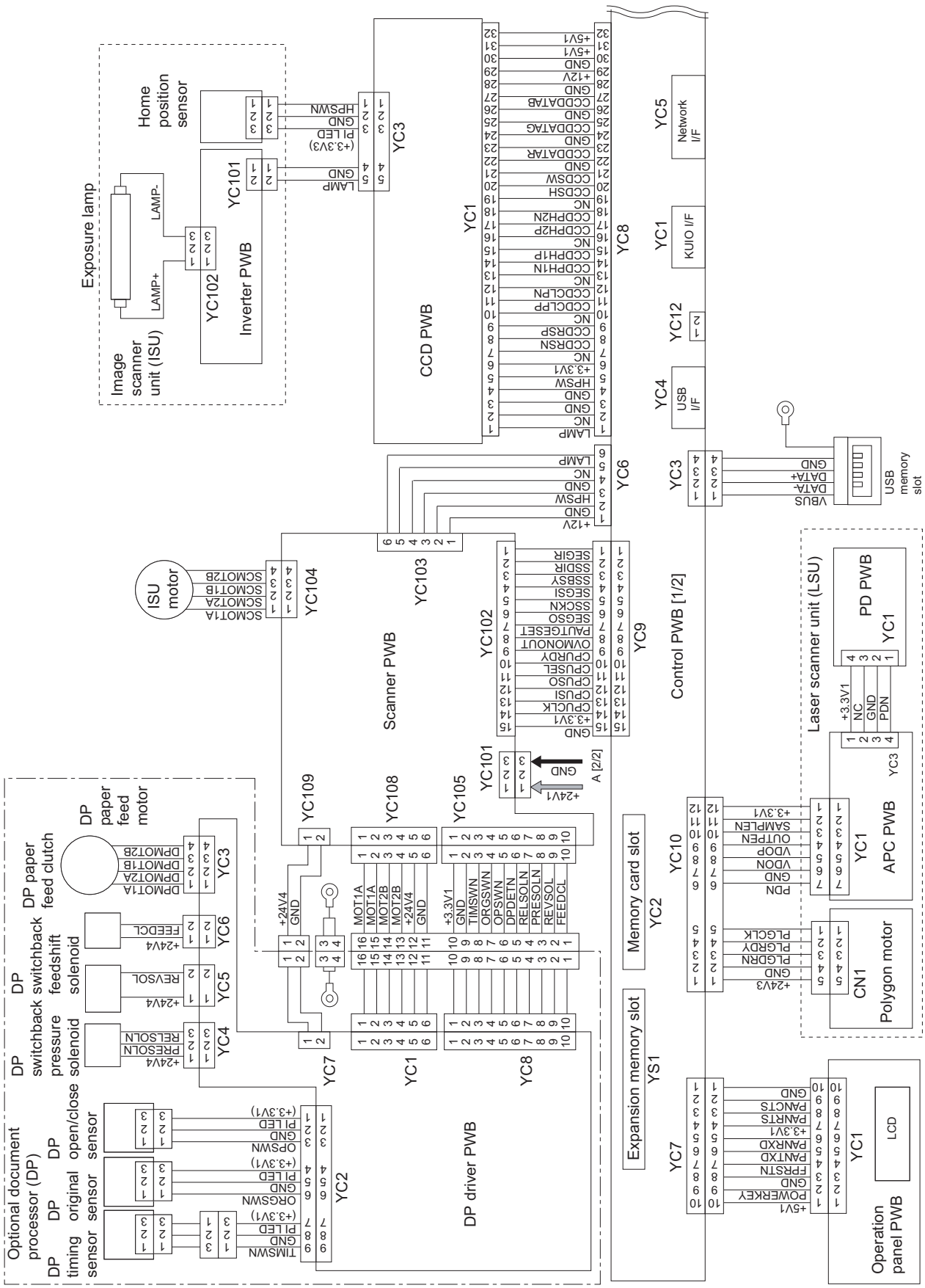

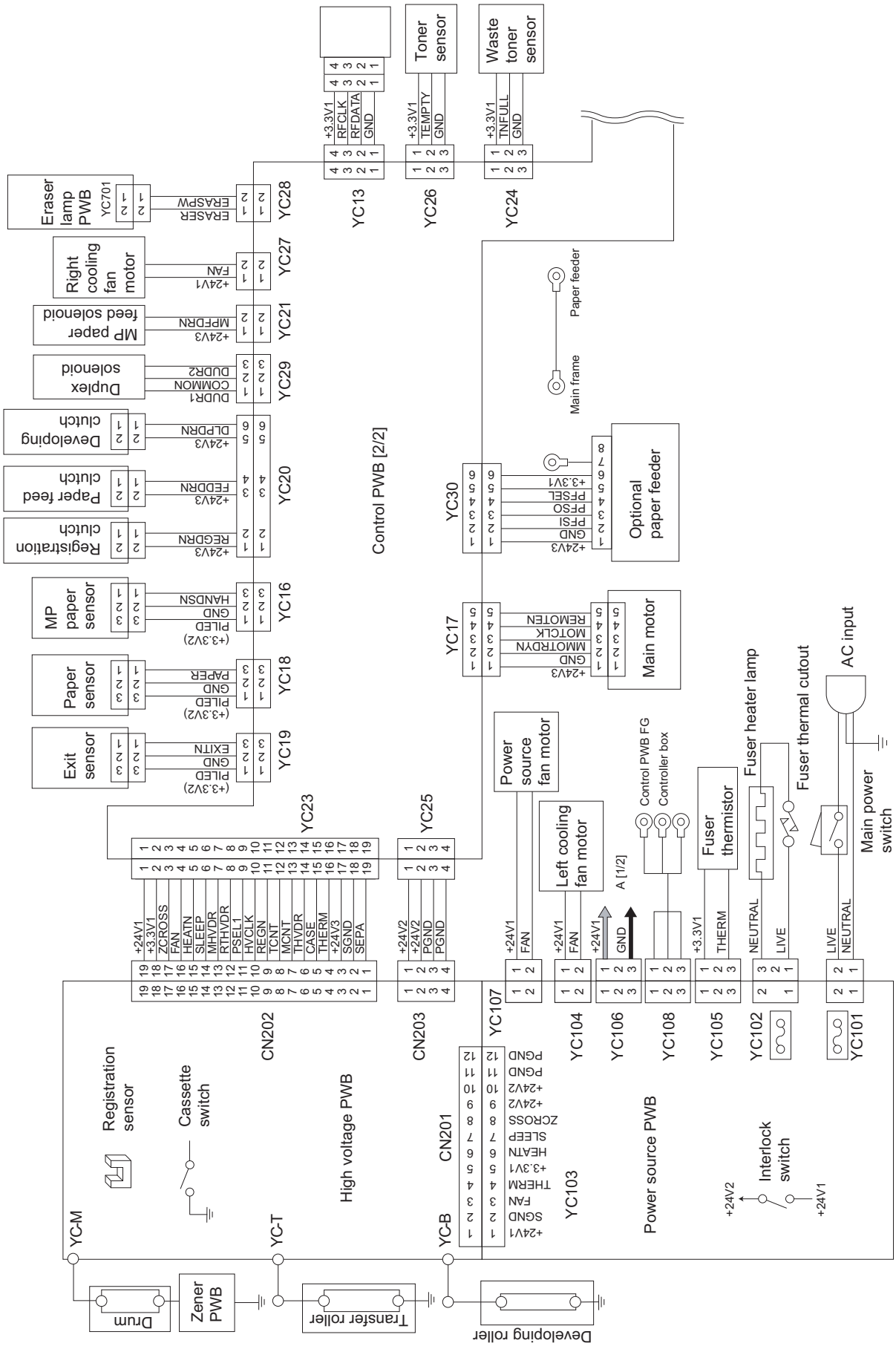
Control PWB [2/2]
Eraser lamp PWB
YC701
ERASER
ERASPW
YC28
Right cooling fan motor
+24V1
FAN
YC27
MP paper feed solenoid
+24V3
MPFDRN
YC21
Duplex solenoid
DUDR1
COMMON
DUDR2
YC29
Developing clutch
+24V3
DLPDRN
Paper feed clutch
+24V3
FEDDRN
Registration clutch
+24V3
REGDRN
YC20
MP paper sensor
(+3.3V2)
PILED
GND
HANDSN
YC16
Paper sensor
(+3.3V2)
PILED
GND
PAPER
YC18
Exit sensor
(+3.3V2)
PILED
GND
EXITN
YC19
YC13
+3.3V1
RFCLK
RFDATA
GND
Toner sensor
+3.3V1
TEMPTY
GND
YC26
Waste toner sensor
+3.3V1
TNFULL
GND
YC24
Paper feeder
Main frame
YC30
+24V3
GND
PFSI
PFSO
PFSEL
+3.3V1
Optional paper feeder
YC17
+24V3
GND
MMOTRDYN
MOTCLK
REMOTEN
Main motor
Power source fan motor
Left cooling fan motor
A [1/2]
Control PWB FG
Controller box
Fuser thermistor
Fuser heater lamp
Fuser thermal cutout
AC input
Main power switch
YC23
+24V1
+3.3V1
ZCROSS
FAN
HEATN
SLEEP
MHVDR
RTHVDR
PSEL1
HVCLK
REGN
TCNT
MCNT
THVDR
CASE
THERM
+24V3
SGND
SEPA
YC25
+24V2
+24V2
PGND
PGND
YC107
+24V1
FAN
YC104
+24V1
FAN
YC106
+24V1
GND
YC108
+3.3V1
THERM
YC105
NEUTRAL
LIVE
YC102
LIVE
NEUTRAL
YC101
CN202
CN203
CN201
YC103
+24V1
SGND
FAN
THERM
+3.3V1
HEATN
SLEEP
ZCROSS
+24V2
+24V2
PGND
PGND
Registration sensor
Cassette switch
High voltage PWB
Power source PWB
Interlock switch
+24V2
+24V1
YC-M
YC-T
YC-B
Drum
Zener PWB
Transfer roller
Developing roller

(2) Repetitive defects gauge

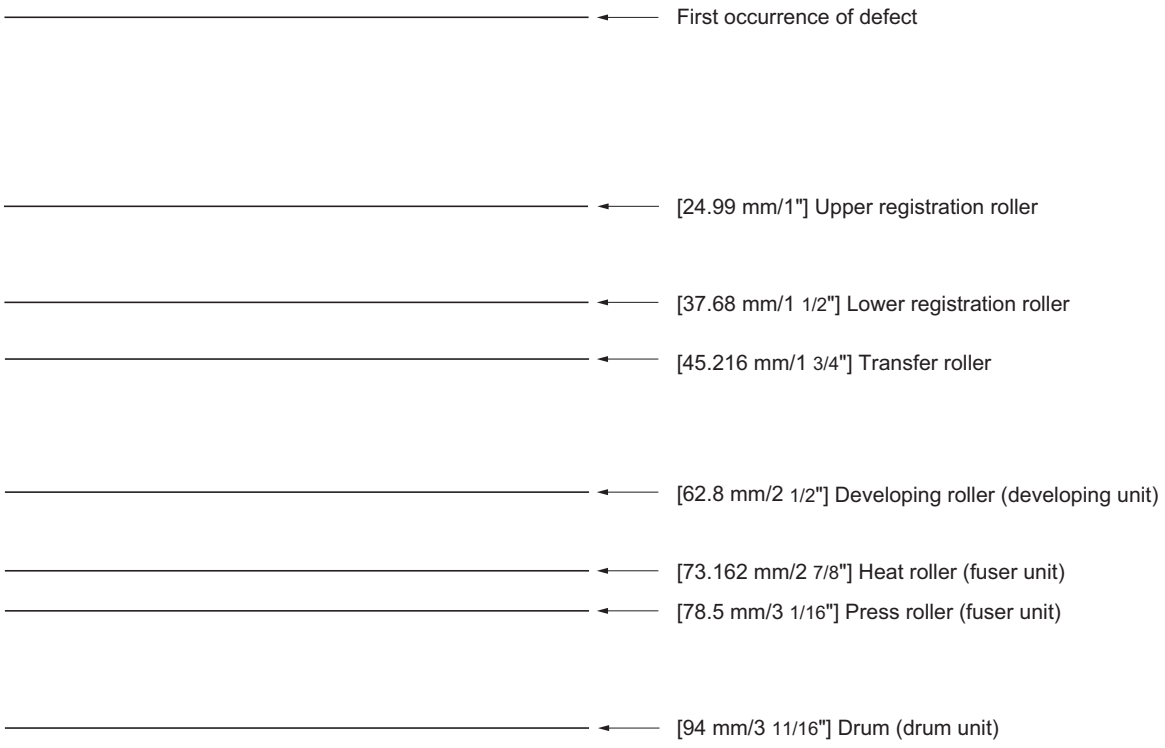

(3) Maintenance parts list

Maintenance part name		Part No.	Alternative part No.	Fig. No.	Ref. No.
Name used in service	Name used in parts list				
Maintenance kit	MK-132/MAINTENANCE KIT (OPTION)	1702H97US0	072H97US	15	-
	DK-150			-	-
	DV-132(U)			-	-
Maintenance kit	MK-130/MAINTENANCE KIT (OPTION)	1702H98EU0	072H98EU	15	-
	DK-150			-	-
	DV-130(E)			-	-
Maintenance kit	MK-134/MAINTENANCE KIT (OPTION)	1702H98AS0	072H98AS	15	-
	DK-150			-	-
	DV-134(AO)			-	-

KYOCERA Document Solutions America, Inc.
Headquarters
225 Sand Road,
Fairfield, New Jersey 07004-0008, USA
Phone: +1-973-808-8444
Fax: +1-973-882-6000

Latin America
8240 NW 52nd Terrace Dawson Building, Suite 100
Miami, Florida 33166, USA
Phone: +1-305-421-6640
Fax: +1-305-421-6666

KYOCERA Document Solutions Canada, Ltd.
6120 Kestrel Rd., Mississauga, ON L5T 1S8,
Canada
Phone: +1-905-670-4425
Fax: +1-905-670-8116

KYOCERA Document Solutions Mexico, S.A. de C.V.
Calle Arquimedes No. 130, 4 Piso, Colonia Polanco
Chapultepec, Delegacion Miguel Hidalgo,
Distrito Federal, C.P. 11560, México
Phone: +52-555-383-2741
Fax: +52-555-383-7804

KYOCERA Document Solutions Brazil, Ltda.
Av.Tambore,1180 Mod.B-09 CEP 06460-000
Tambore-Barueri-SP, Brazil
Phone: +55-11-4195-8496
Fax: +55-11-4195-6167

KYOCERA Document Solutions Australia Pty. Ltd.
Level 3, 6-10 Talavera Road North Ryde N.S.W, 2113,
Australia
Phone: +61-2-9888-9999
Fax: +61-2-9888-9588

KYOCERA Document Solutions New Zealand Ltd.
1-3 Parkhead Place, Albany, Auckland 1330,
New Zealand
Phone: +64-9-415-4517
Fax: +64-9-415-4597

KYOCERA Document Solutions Asia Limited
16/F.,Mita Centre, 552-566, Castle Peak Road
Tsuenwan, NT, Hong Kong
Phone: +852-2610-2181
Fax: +852-2610-2063

KYOCERA Document Solutions (Thailand) Corp., Ltd.
335 Ratchadapisek Road, Bangsue, Bangkok 10800,
Thailand
Phone: +66-2-586-0333
Fax: +66-2-586-0278

KYOCERA Document Solutions Singapore Pte. Ltd.
12 Tai Seng Street #04-01A,
Luxasia Building, Singapore 534118
Phone: +65-6741-8733
Fax: +65-6748-3788

KYOCERA Document Solutions Hong Kong Limited
16/F.,Mita Centre, 552-566, Castle Peak Road
Tsuenwan, NT, Hong Kong
Phone: +852-2429-7422
Fax: +852-2423-2159

KYOCERA Document Solutions Taiwan Corporation
6F., No.37, Sec. 3, Minquan E. Rd.,
Zhongshan Dist., Taipei 104, Taiwan R.O.C.
Phone: +886-2-2507-6709
Fax: +886-2-2507-8432

KYOCERA Document Solutions Korea Co., Ltd.
18F, Kangnam bldg, 1321-1,
Seocho-Dong, Seocho-Gu, Seoul, Korea
Phone: +822-6933-4050
Fax: +822-747-0084

KYOCERA Document Solutions India Private Limited
First Floor, ORCHID CENTRE
Sector-53, Golf Course Road, Gurgaon 122 002,
India
Phone: +91-0124-4671000
Fax: +91-0124-4671001

KYOCERA Document Solutions Europe B.V.
Bloemlaan 4, 2132 NP Hoofddorp,
The Netherlands
Phone: +31-20-654-0000
Fax: +31-20-653-1256

KYOCERA Document Solutions Nederland B.V.
Beechavenue 25, 1119 RA Schiphol-Rijk,
The Netherlands
Phone: +31-20-5877200
Fax: +31-20-5877260

KYOCERA Document Solutions (U.K.) Limited
8 Beacontree Plaza,
Gillette Way Reading, Berkshire RG2 0BS,
United Kingdom
Phone: +44-118-931-1500
Fax: +44-118-931-1108

KYOCERA Document Solutions Italia S.p.A.
Via Verdi, 89/91 20063 Cernusco s/N.(MI),
Italy
Phone: +39-02-921791
Fax: +39-02-92179-600

KYOCERA Document Solutions Belgium N.V.
Sint-Martinusweg 199-201 1930 Zaventem,
Belgium
Phone: +32-2-7209270
Fax: +32-2-7208748

KYOCERA Document Solutions France S.A.S.
Espace Technologique de St Aubin
Route de l'Orme 91195 Gif-sur-Yvette CEDEX,
France
Phone: +33-1-69852600
Fax: +33-1-69853409

KYOCERA Document Solutions Espana, S.A.
Edificio Kyocera, Avda. de Manacor No.2,
28290 Las Matas (Madrid), Spain
Phone: +34-91-6318392
Fax: +34-91-6318219

KYOCERA Document Solutions Finland Oy
Atomitie 5C, 00370 Helsinki,
Finland
Phone: +358-9-47805200
Fax: +358-9-47805390

KYOCERA Document Solutions Europe B.V., Amsterdam (NL) Zürich Branch
Hohlstrasse 614, 8048 Zürich,
Switzerland
Phone: +41-44-9084949
Fax: +41-44-9084950

KYOCERA Document Solutions Deutschland GmbH
Otto-Hahn-Strasse 12, 40670 Meerbusch,
Germany
Phone: +49-2159-9180
Fax: +49-2159-918100

KYOCERA Document Solutions Austria GmbH
Eduard-Kittenberger-Gasse 95, 1230 Vienna,
Austria
Phone: +43-1-863380
Fax: +43-1-86338-400

KYOCERA Document Solutions Nordic AB
Esbogatan 16B 164 75 Kista, Sweden
Phone: +46-8-546-550-00
Fax: +46-8-546-550-10

KYOCERA Document Solutions Norge NUF
Postboks 150 Oppsal, 0619 Oslo,
Norway
Phone: +47-22-62-73-00
Fax: +47-22-62-72-00

KYOCERA Document Solutions Danmark A/S
Ejby Industrivej 60, DK-2600 Glostrup,
Denmark
Phone: +45-70223880
Fax: +45-45765850

KYOCERA Document Solutions Portugal Lda.
Rua do Centro Cultural, 41 (Alvalade) 1700-106 Lisboa,
Portugal
Phone: +351-21-843-6780
Fax: +351-21-849-3312

KYOCERA Document Solutions South Africa (Pty) Ltd.
49 Kyalami Boulevard,
Kyalami Business Park 1685 Midrand, South Africa
Phone: +27-11-540-2600
Fax: +27-11-466-3050

KYOCERA Document Solutions Russia LLC
Botanichesky pereulok 5, Moscow, 129090,
Russia
Phone: +7(495)741-0004
Fax: +7(495)741-0018

KYOCERA Document Solutions Middle East
Dubai Internet City, Bldg. 17,
Office 157 P.O. Box 500817, Dubai,
United Arab Emirates
Phone: +971-04-433-0412

KYOCERA Document Solutions Inc.
2-28, 1-chome, Tamatsukuri, Chuo-ku
Osaka 540-8585, Japan
Phone: +81-6-6764-3555
http://www.kyoceradocumentsolutions.com

© 2012 KYOCERA Document Solutions Inc.
KYOCERA is a trademark of KYOCERA Corporation